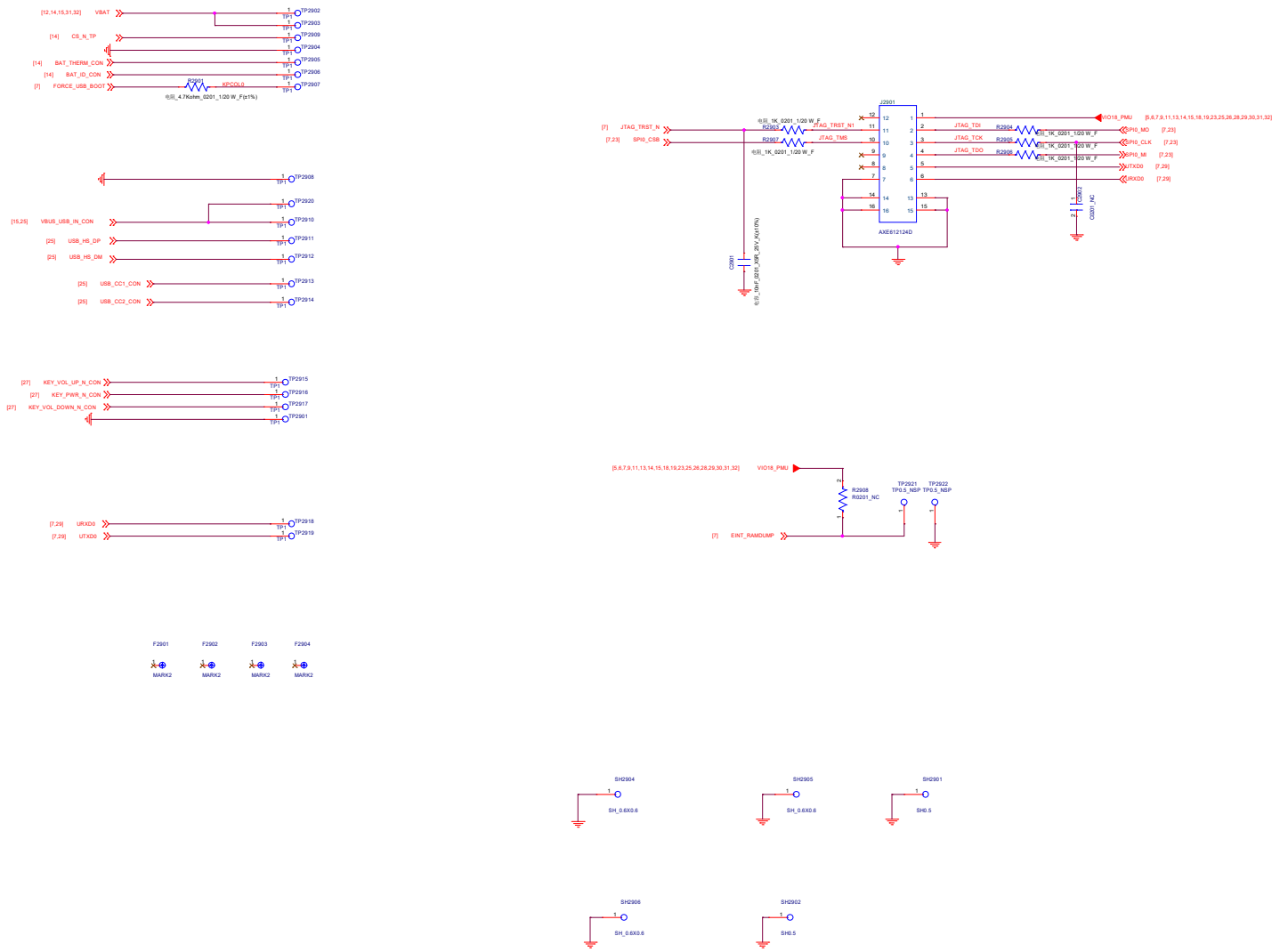
[12,14,15,31,32] VBAT
TP2902
TP2903
[14] CS_N_TP
TP2909
TP2904
[14] BAT_THERM_CON
TP2905
[14] BAT_ID_CON
TP2906
[7] FORCE_USB_BOOT
R2901
KPCOL0
TP2907
电阻_4.7Kohm_0201_1/20 W_F(±1%)
TP2908
TP2920
[15,25] VBUS_USB_IN_CON
TP2910
[25] USB_HS_DP
TP2911
[25] USB_HS_DM
TP2912
[25] USB_CC1_CON
TP2913
[25] USB_CC2_CON
TP2914
[27] KEY_VOL_UP_N_CON
TP2915
[27] KEY_PWR_N_CON
TP2916
[27] KEY_VOL_DOWN_N_CON
TP2917
TP2901
[7,29] URXD0
TP2918
[7,29] UTXD0
TP2919
F2901
F2902
F2903
F2904
MARK2
MARK2
MARK2
MARK2
J2901
[7] JTAG_TRST_N
[7,23] SPI0_CS0
电阻_1K_0201_1/20 W_F
R2903
JTAG_TRST_N1
R2907
JTAG_TMS
电阻_1K_0201_1/20 W_F
C2901
电容_10uF_0201_CAP_25V_X5r(1%)
JTAG_TDI
R2904
JTAG_TCK
R2905
JTAG_TDO
R2906
电阻_1K_0201_1/20 W_F
VIO18_PMU
[5,6,7,9,11,13,14,15,18,19,23,25,26,28,29,30,31,32]
SPI0_MO
[7,23]
SPI0_CLK
[7,23]
SPI0_MI
[7,23]
UTXD0
[7,29]
URXD0
[7,29]
C2201_NC
AXE612124D
[5,6,7,9,11,13,14,15,18,19,23,25,26,28,29,30,31,32] VIO18_PMU
R2908
R0201_NC
TP2921
TP0.5_NSP
TP2922
TP0.5_NSP
[7] EINT_RAMDUMP
SH2904
SH_0.6X0.6
SH2905
SH_0.6X0.6
SH2901
SH0.5
SH2906
SH_0.6X0.6
SH2902
SH0.5

ALPS Sensor

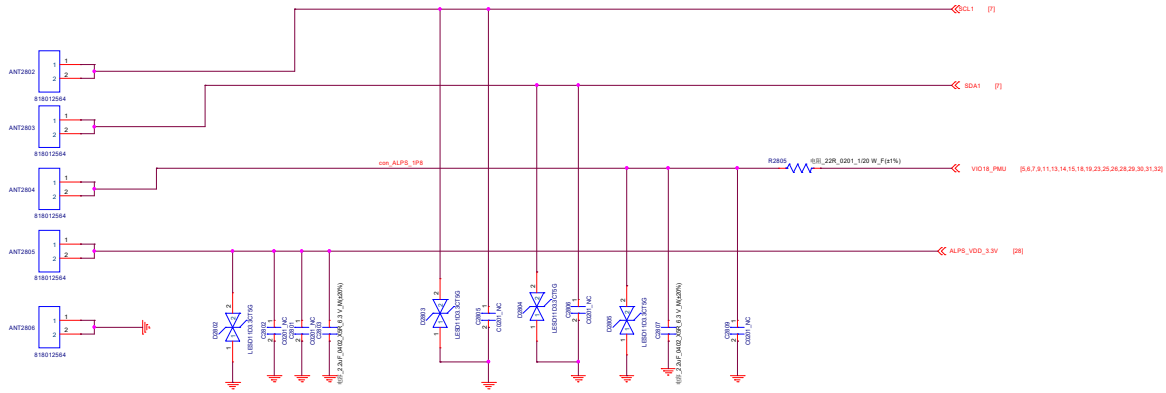
ANT2802
ANT2803
ANT2804
ANT2805
ANT2806
818012564
SCL1 [7]
SDA1 [7]
con_ALPS_1P8
R2805
VIO18_PMU [5,6,7,9,11,13,14,15,18,19,23,25,26,28,29,30,31,32]
ALPS_VDD_3.3V [28]
D2802
D2803
D2804
D2805
LESD1103.3CTSG
C2801_NC
C2802_NC
C2803_NC
C2804_NC
C2805_NC
C2806_NC
C2807_NC
C2808_NC
C2809_NC
C2810_NC
C2811_NC
C2812_NC
C2813_NC
C2814_NC
C2815_NC
C2816_NC
C2817_NC
C2818_NC
C2819_NC
C2820_NC
C2821_NC
C2822_NC
C2823_NC
C2824_NC
C2825_NC
C2826_NC
C2827_NC
C2828_NC
C2829_NC
C2830_NC
C2831_NC
C2832_NC
C2833_NC
C2834_NC
C2835_NC
C2836_NC
C2837_NC
C2838_NC
C2839_NC
C2840_NC

Rear Flash

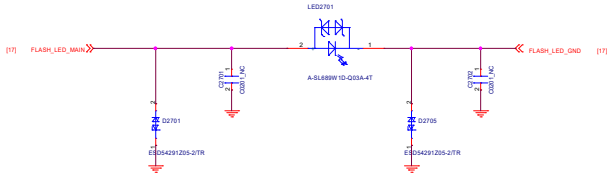

Side Key

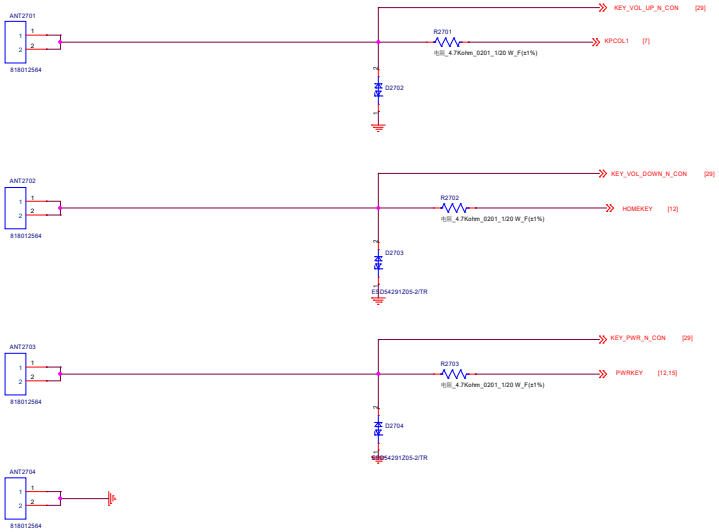

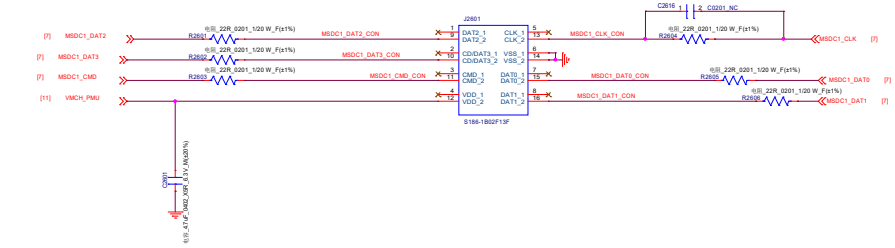

NANO SIM1

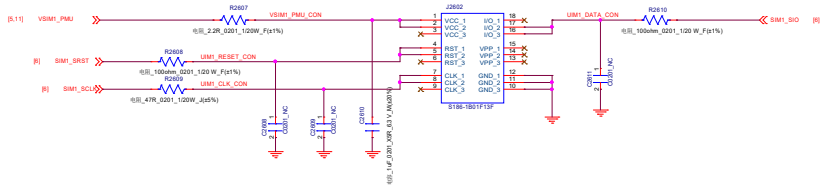

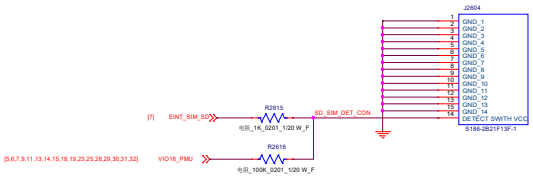

NANO SIM2

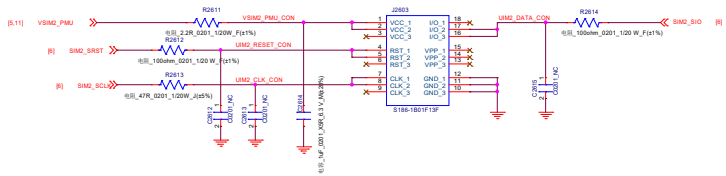

Link B2B

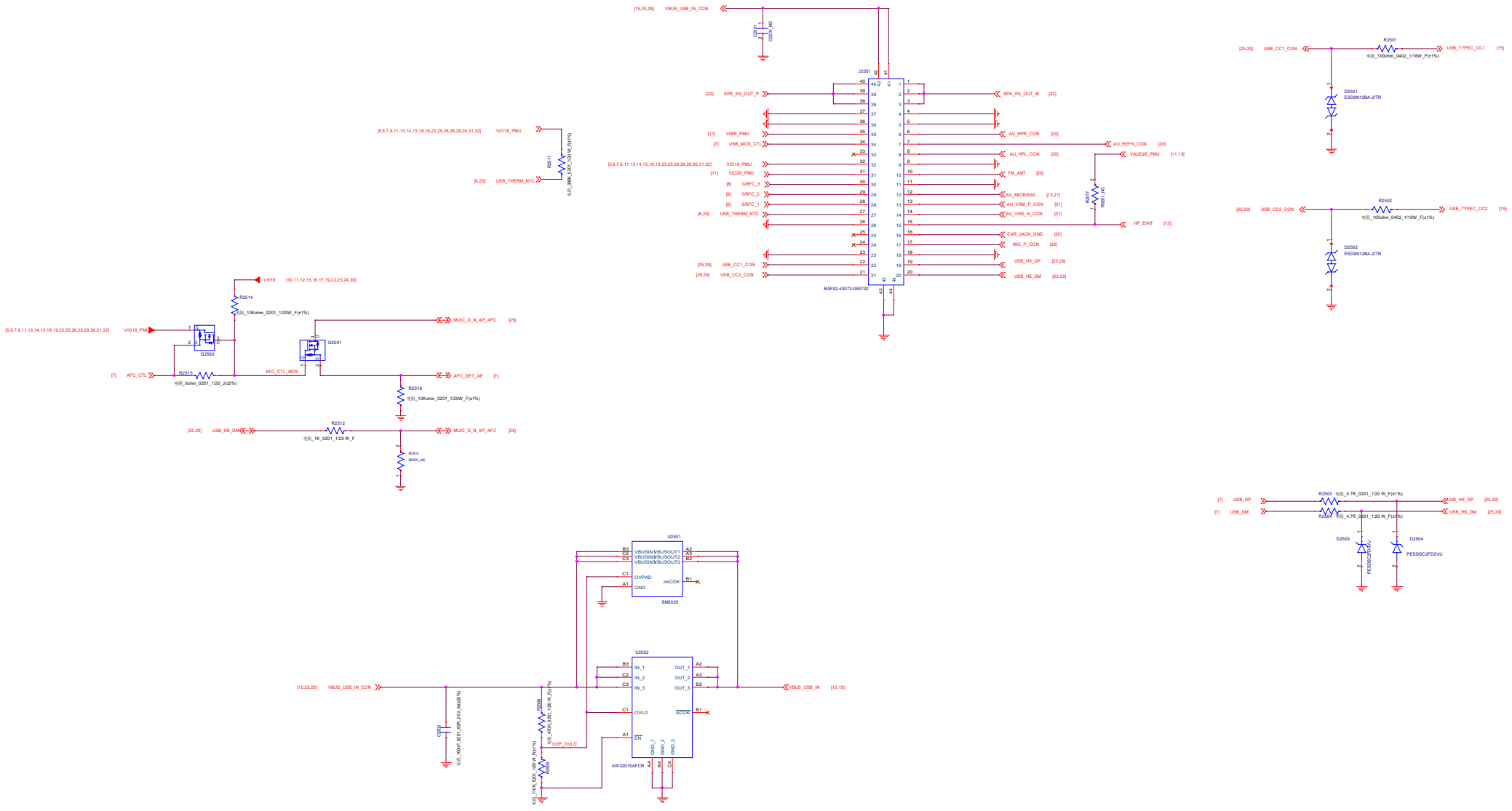
J2501
BAF92-40073-050702
VBUS_USB_IN_CON
SPK_PA_OUT_P
SPK_PA_OUT_M
AU_HPR_CON
AU_REFN_CON
AU_HPL_CON
VAUD28_PMU
FM_ANT
AU_MICBIAS0
AU_VIN0_P_CON
AU_VIN0_N_CON
HP_EINT
EAR_JACK_GND
MIC_P_CON
USB_HS_DP
USB_HS_DM
USB_CC1_CON
USB_CC2_CON
USB_TYPEC_CC1
USB_TYPEC_CC2
D2501
ESD9N12BA-2/TR
D2502
ESD9N12BA-2/TR
VIO18_PMU
VIBR_PMU
USB_MOS_CTL
VIO28_PMU
GRFC_3
GRFC_2
GRFC_1
USB_THERM_NTC
VSYS
R2514
Q2502
Q2501
MUIC_D_N_AP_AFC
AFC_CTL
AFC_CTL_MOS
AFC_DET_AP
R2515
R2516
R2512
R2513
U2501
SM5335
U2502
AW32915AFCR
VBUS_USB_IN
OVP_OVLO
D2503
D2504
PESDSC2FD5VU

Main Rear Camera 13M

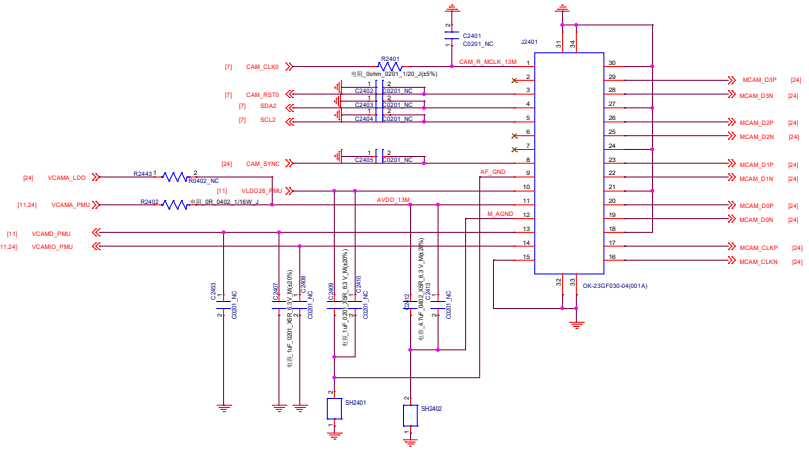

Main Rear Camera 13M

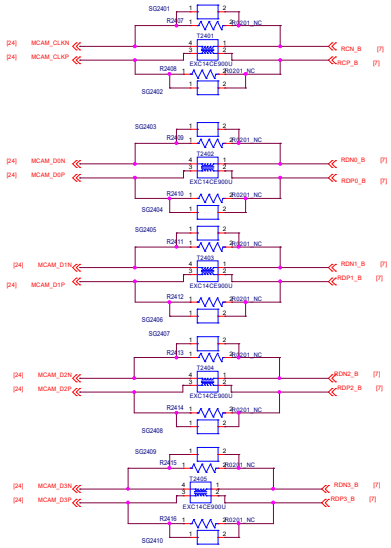

Front 5M Camera

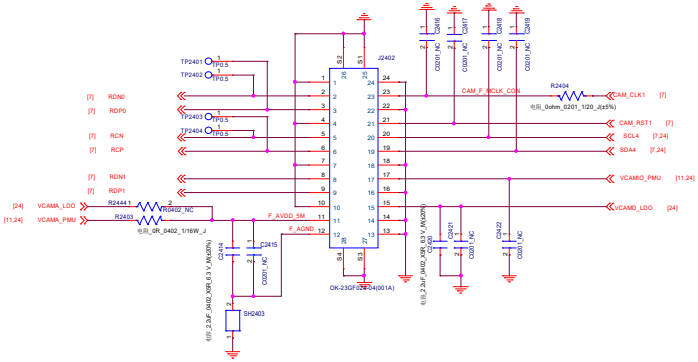

5MFF&2M Depth AVDD LDO

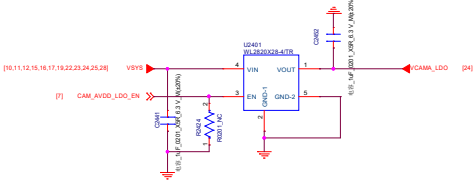

5MFF&2M Depth DVDD LDO

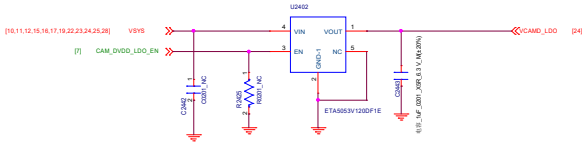

Camera 2M Depth

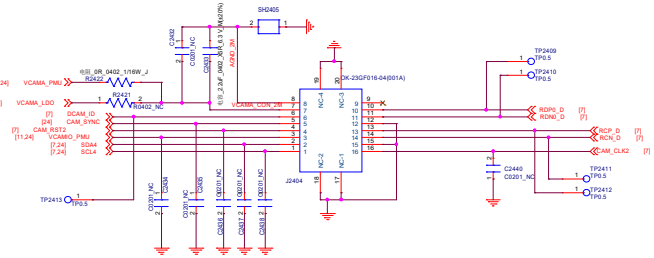

LCM/TP

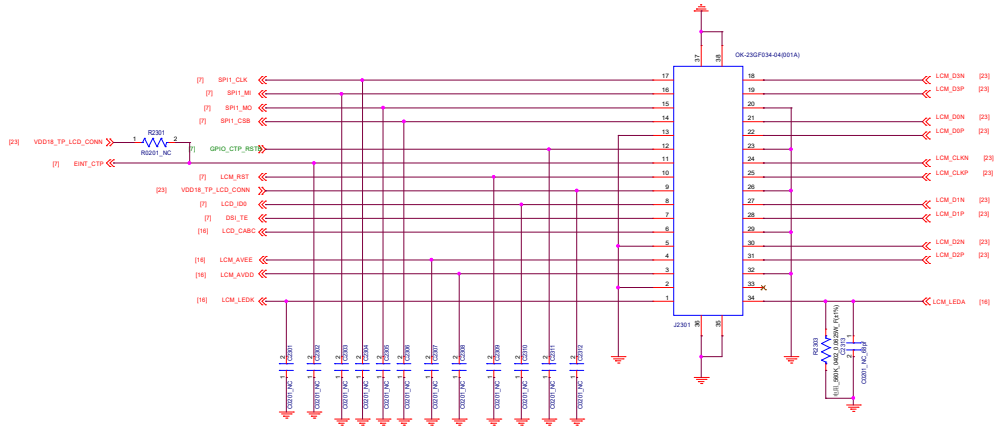

LCD MIPI Common Mode Filter

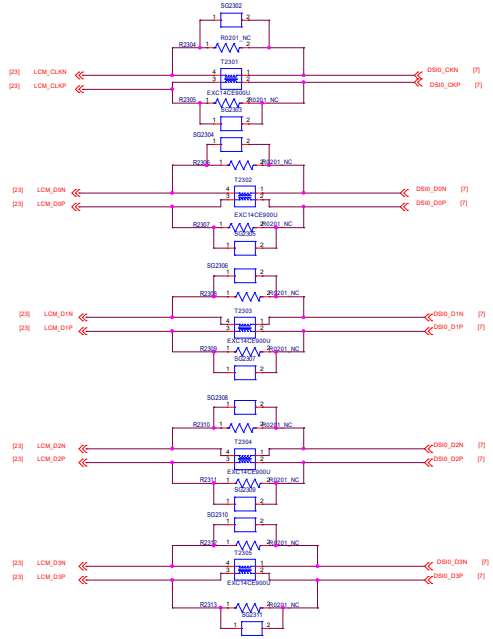

LDO For TP1.8V

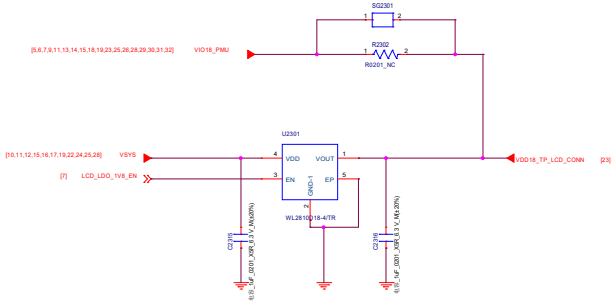

Finger Printer

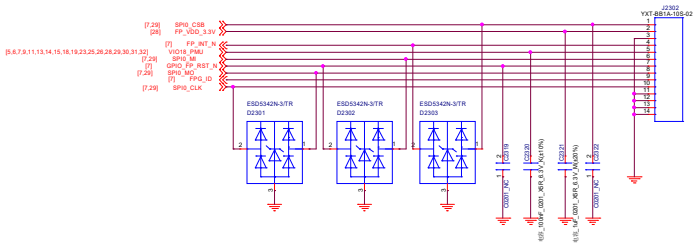

AUDIO K8 PA

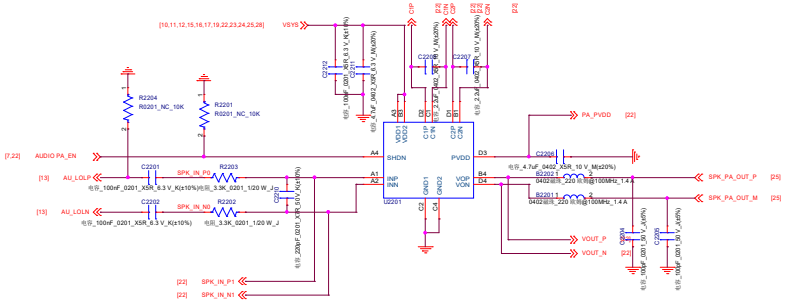
[10,11,12,15,16,17,19,22,23,24,25,28]
VSYS
C1P
D2
C2N
D2
C2212
电容_100nF_0201_X5R_6.3 V_K(±10%)
C2211
电容_2.2uF_0402_X5R_6.3 V_K(±20%)
C2206
电容_2.2uF_0402_X5R_6.3 V_K(±20%)
C2207
电容_2.2uF_0402_X5R_6.3 V_K(±20%)
R2204
R0201_NC_10K
R2201
R0201_NC_10K
[7,22]
AUDIO PA_EN
A4
SHDN
VDD1
VDD2
A3
D2
C1P
C1N
D1
C2P
C2N
D1
PVDD
D3
PA_PVDD
[22]
C2208
电容_4.7uF_0402_X5R_10 V_M(±20%)
[13]
AU_LOLP
C2201
电容_100nF_0201_X5R_6.3 V_K(±10%)
SPK_IN_P1
R2203
电阻_3.3K_0201_1/20 W_J
A1
INP
A2
INN
U2201
GND1
GND2
C3
C4
VOP
VON
B4
D4
B2202
1
2
0402磁珠_220 欧姆@100MHz_1.4 A
B2201
1
2
0402磁珠_220 欧姆@100MHz_1.4 A
SPK_PA_OUT_P
[25]
SPK_PA_OUT_M
[25]
[13]
AU_LOLN
C2202
电容_100nF_0201_X5R_6.3 V_K(±10%)
SPK_IN_N1
R2202
电阻_3.3K_0201_1/20 W_J
C2210
电容_220pF_0201_X5R_6.3 V_K(±10%)
VOUT_P
VOUT_N
[22]
C2204
电容_100uF_0603_6.3 V_K(±20%)
C2205
电容_100uF_0603_6.3 V_K(±20%)
[22]
SPK_IN_P1
[22]
SPK_IN_N1

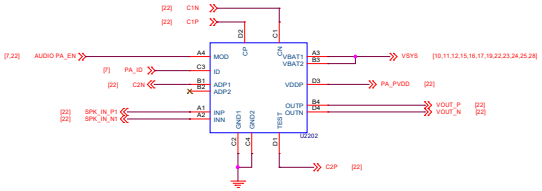
[22]
C1N
[22]
C1P
D2
C1P
C1
C2N
[7,22]
AUDIO PA_EN
A4
MOD
[7]
PA_ID
C3
ID
[22]
C2N
B1
ADP1
B2
ADP2
[22]
SPK_IN_P1
[22]
SPK_IN_N1
A1
INP
A2
INN
GND1
GND2
C3
C4
U2202
VBAT1
VBAT2
A3
B3
VSYS
[10,11,12,15,16,17,19,22,23,24,25,28]
VDDP
D3
PA_PVDD
[22]
OUTP
OUTN
B4
D4
VOUT_P
VOUT_N
[22]
[23]
D1
C2P
[22]

MAIN_MIC KB

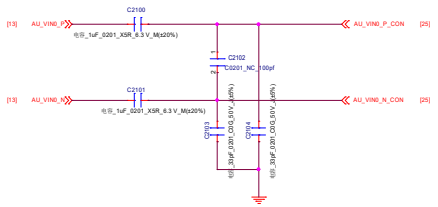

SUB_MIC MB

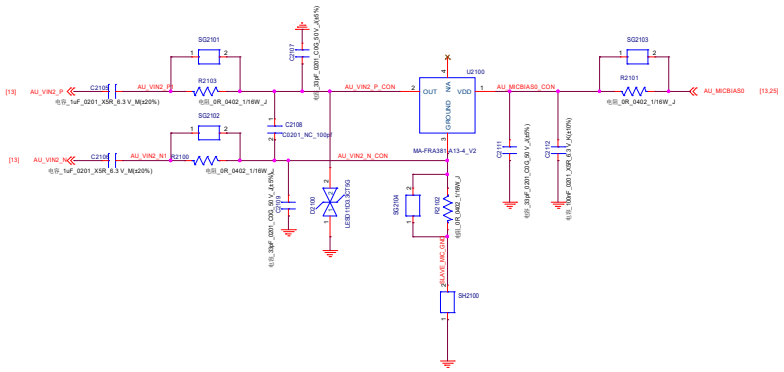

RECEIVER

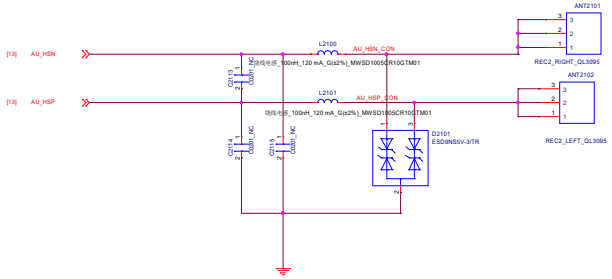

Earphone Audio

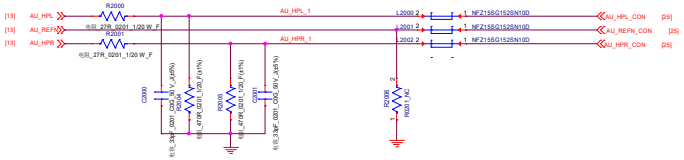

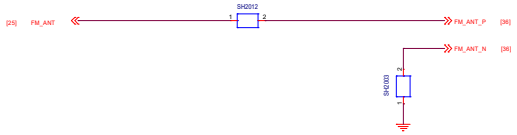

Earphone Microphone

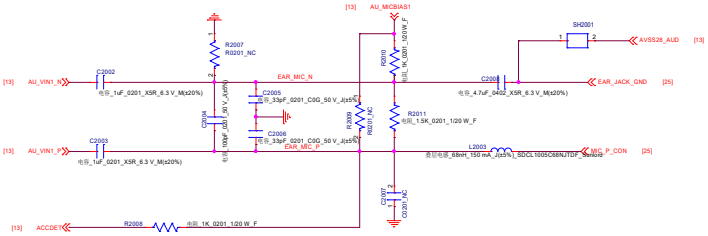

LDO for VA12 (For CPU)

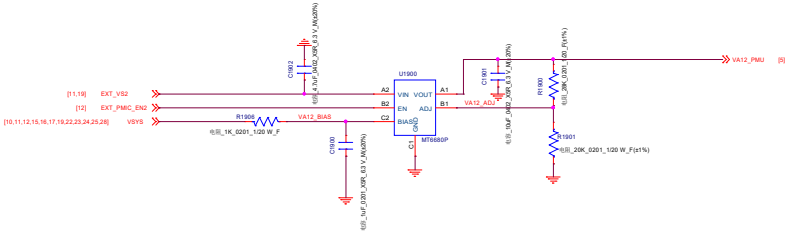

Ext. Bulk for VS2 (For PMU)

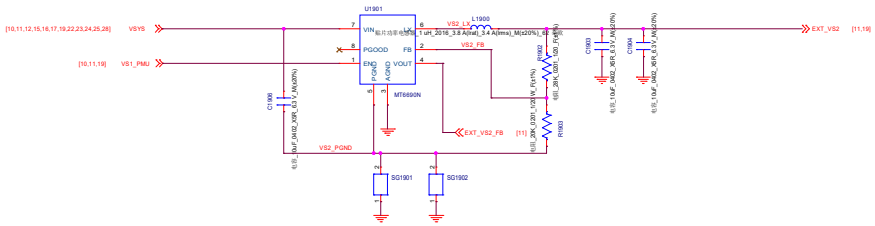

Ext. buck LP4X VDRAM

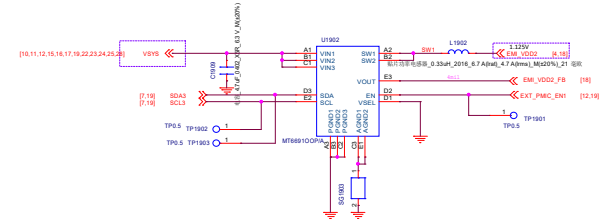

Ext. buck LP4X VDDQ

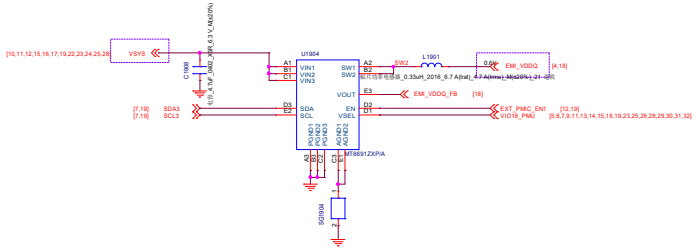

LPDDR4/LPDDR4X VDD1 1.8V LDO

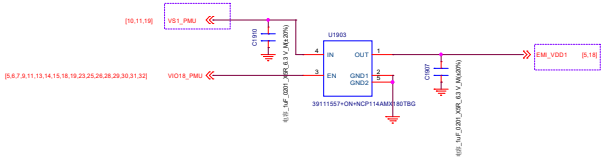

LCM Bias

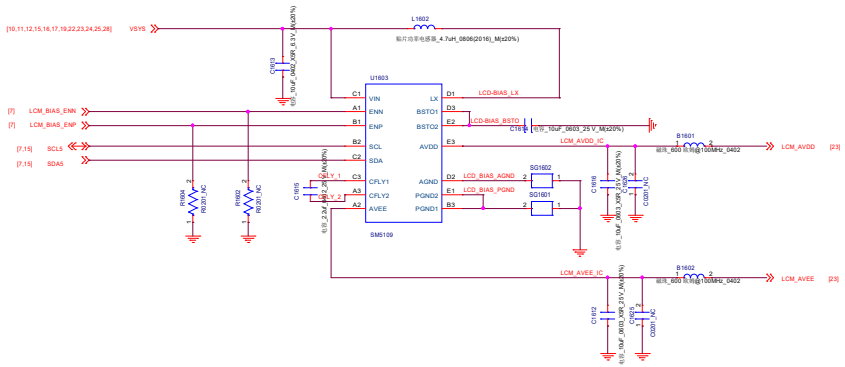

LCM Backlight Driver

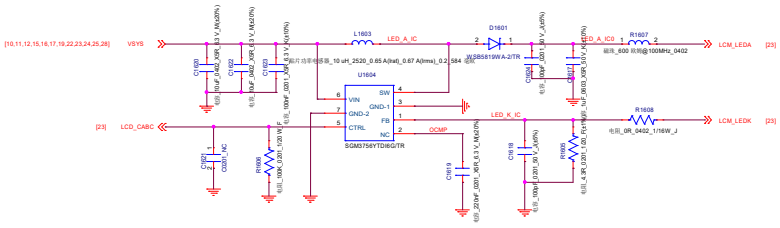

Charger IC

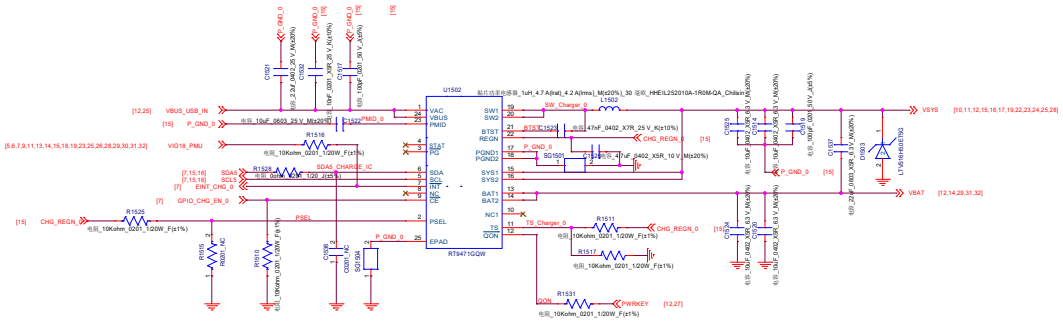

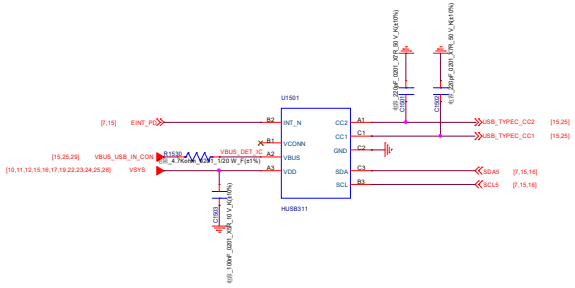

CC

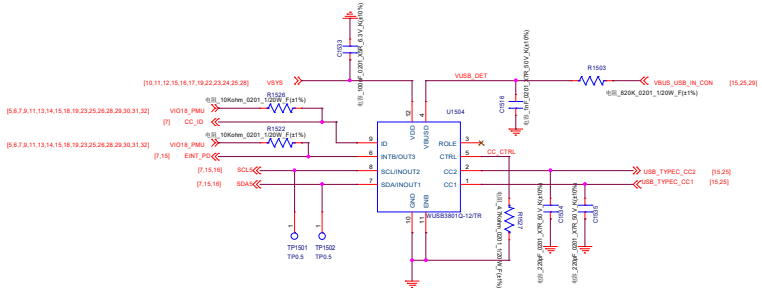

BATTERY CONNECTOR

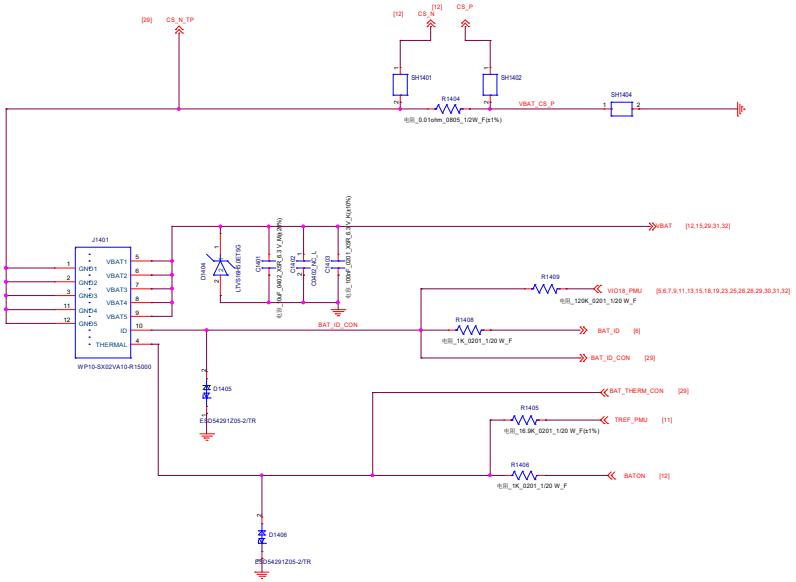

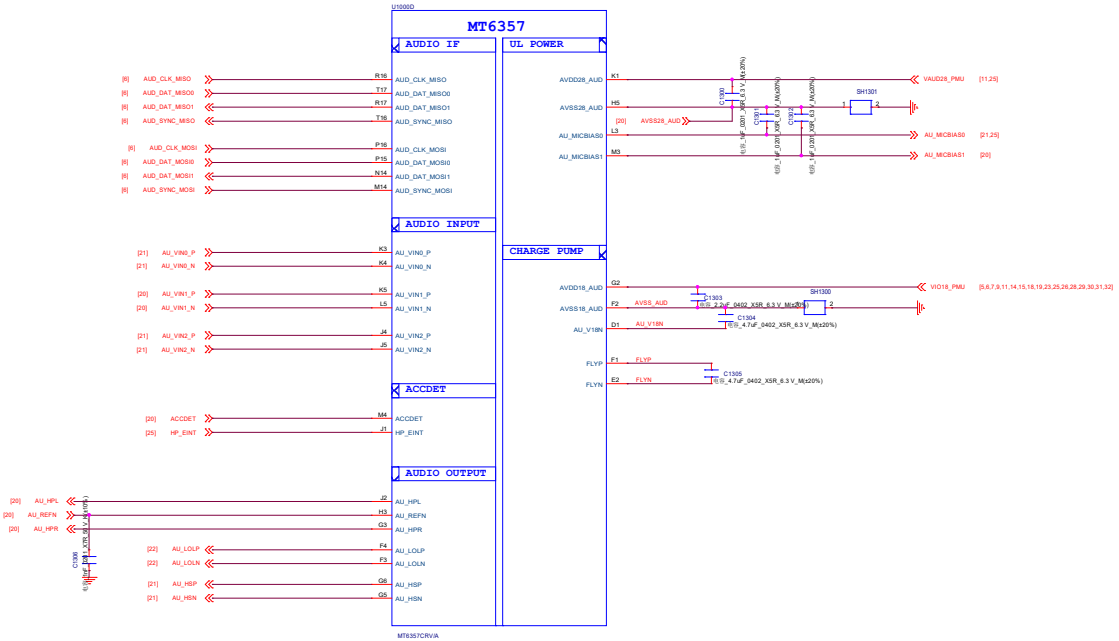
U1000D
MT6357
AUDIO IF
UL POWER
AUDIO INPUT
CHARGE PUMP
ACCDET
AUDIO OUTPUT
[8] AUD_CLK_MISO R16 AUD_CLK_MISO
[8] AUD_DAT_MISO0 T17 AUD_DAT_MISO0
[8] AUD_DAT_MISO1 R17 AUD_DAT_MISO1
[8] AUD_SYNC_MISO T16 AUD_SYNC_MISO
[8] AUD_CLK_MOSI P16 AUD_CLK_MOSI
[8] AUD_DAT_MOSI0 P15 AUD_DAT_MOSI0
[8] AUD_DAT_MOSI1 N14 AUD_DAT_MOSI1
[8] AUD_SYNC_MOSI M14 AUD_SYNC_MOSI
[21] AU_VIN0_P K3 AU_VIN0_P
[21] AU_VIN0_N K4 AU_VIN0_N
[20] AU_VIN1_P K5 AU_VIN1_P
[20] AU_VIN1_N L5 AU_VIN1_N
[21] AU_VIN2_P J4 AU_VIN2_P
[21] AU_VIN2_N J5 AU_VIN2_N
[20] ACCDET M4 ACCDET
[25] HP_EINT J1 HP_EINT
[20] AU_HPL J2 AU_HPL
[20] AU_REFN H3 AU_REFN
[20] AU_HPR G3 AU_HPR
[22] AU_LOLP F4 AU_LOLP
[22] AU_LOLN F3 AU_LOLN
[21] AU_HSP G6 AU_HSP
[21] AU_HSN G5 AU_HSN
C1300 [E0_1uF_0201_XSR_6.3 V_M(±20%)]
AVDD28_AUD K1 VAUD28_PMU [11,25]
AVSS28_AUD H5 [20] AVSS28_AUD
AU_MICBIAS0 L3 AU_MICBIAS0 [21,25]
AU_MICBIAS1 M3 AU_MICBIAS1 [20]
C1301 [E0_1uF_0201_XSR_6.3 V_M(±20%)]
C1302 [E0_1uF_0201_XSR_6.3 V_M(±20%)]
SH1301
AVDD18_AUD G2 VIO18_PMU [5,6,7,9,11,14,15,18,19,23,25,26,28,29,30,31,32]
AVSS18_AUD F2 AVSS_AUD
C1303 [E0_2.2uF_0402_XSR_6.3 V_M(±20%)]
SH1300
AU_V18N D1 AU_V18N
C1304 [E0_4.7uF_0402_XSR_6.3 V_M(±20%)]
FLYP F1 FLYP
FLYN E2 FLYN
C1305 [E0_4.7uF_0402_XSR_6.3 V_M(±20%)]
MT6357CRVA

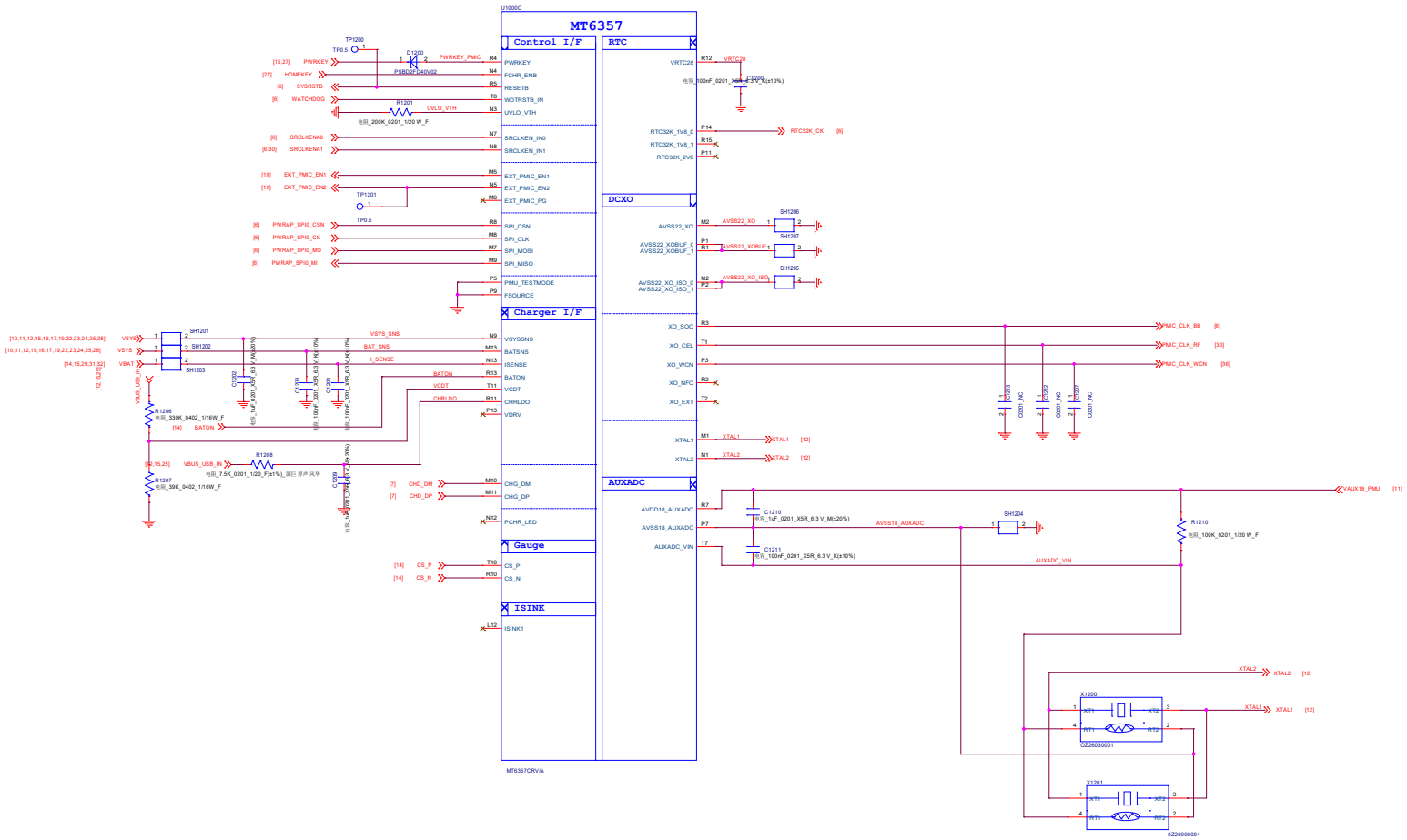
U1000C
MT6357
Control I/F
RTC
DCXO
Charger I/F
AUXADC
Gauge
ISINK
PWRKEY
FCHR_ENB
RESETB
WDTRSTB_IN
UVLO_VTH
SRCLKENI_IN0
SRCLKENI_IN1
EXT_PMIC_EN1
EXT_PMIC_EN2
EXT_PMIC_PG
SPI_CSN
SPI_CLK
SPI_MOSI
SPI_MISO
PMU_TESTMODE
FSOURCE
VSYSSNS
BATSNS
ISENSE
BATON
VCDT
CHRLDO
VDRV
CHG_DM
CHG_DP
PCHR_LED
CS_P
CS_N
ISINK1
VRTC28
RTC32K_1V8_0
RTC32K_1V8_1
RTC32K_2V8
AVSS22_XO
AVSS22_XOBUF_0
AVSS22_XOBUF_1
AVSS22_XO_ISO_0
AVSS22_XO_ISO_1
XO_SOC
XO_CEL
XO_WCN
XO_NFC
XO_EXT
XTAL1
XTAL2
AVDD18_AUXADC
AVSS18_AUXADC
AUXADC_VIN
MT6357CRVIA
PWRKEY_PMIC
UVLO_VTH
VSYS_SNS
BAT_SNS
I_SENSE
BATON
VCDT
CHRLDO
VBUS_USB_IN
CHD_DM
CHD_DP
AVSS22_XO
AVSS22_XOBUF
AVSS22_XO_ISO
RTC32K_CK
MMC_CLK_BB
MMC_CLK_RF
MMC_CLK_WCN
XTAL1
XTAL2
VAUX18_PMU
AVSS18_AUXADC
AUXADC_VIN
X1200
X1201
SZ28030001
SZ28000004

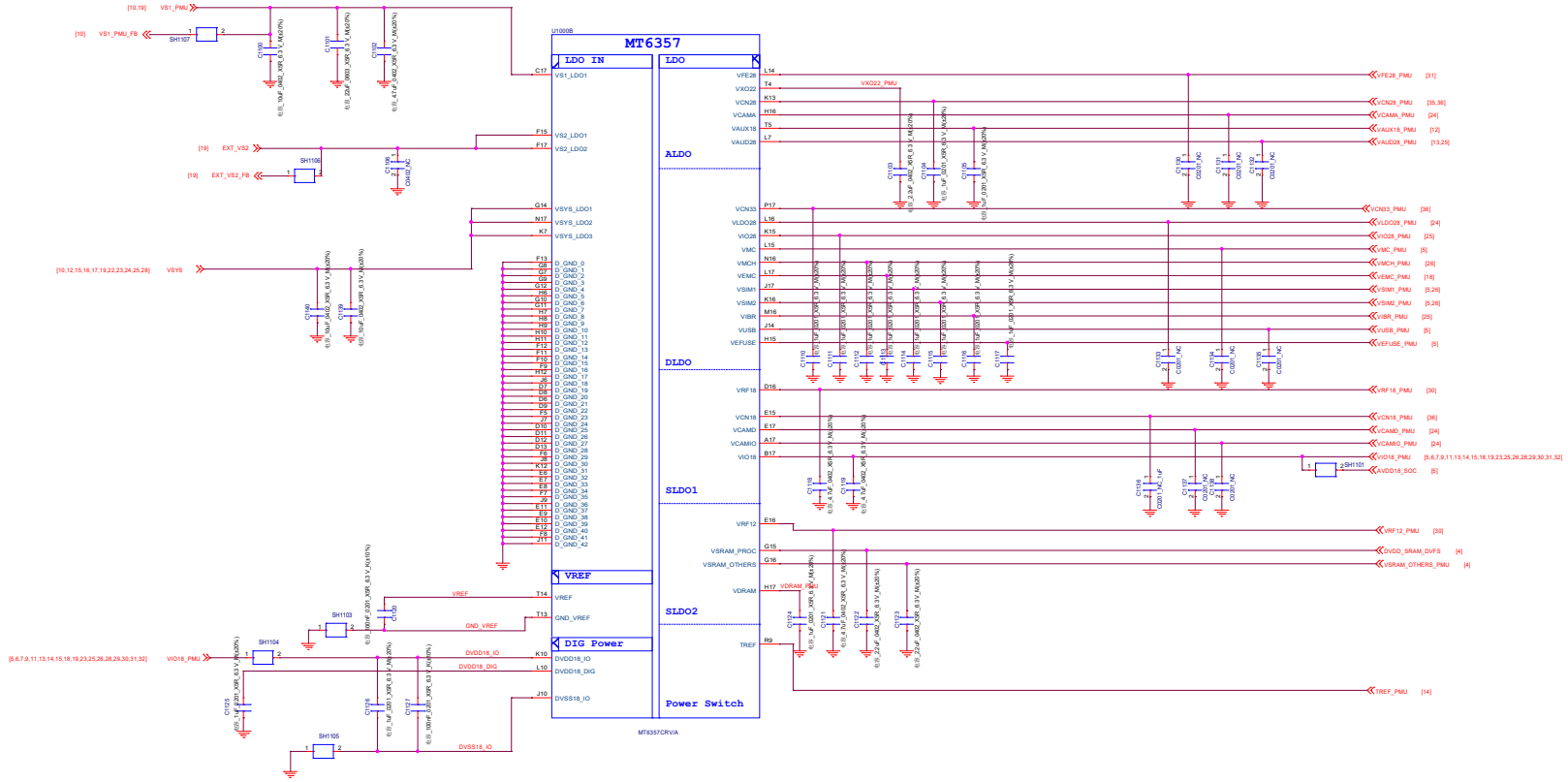
U1000B
MT6357
LDO IN
LDO
ALDO
DLDO
SLDO1
SLDO2
Power Switch
VREF
DIG Power
MT6357CRVIA
VS1_PMU
VS1_PMU_FB
SH107
EXT_VS2
EXT_VS2_FB
SH1106
VSYS
VIO18_PMU
SH1104
SH1103
SH1105
VREF
GND_VREF
DVDD18_IO
DVDD18_DIG
DVSS18_IO
VXO22_PMU
VFE28_PMU
VCN28_PMU
VCAMA_PMU
VAUX18_PMU
VAUD28_PMU
VCN33_PMU
VLDO28_PMU
VIO28_PMU
VMC_PMU
VMCH_PMU
VEMC_PMU
VSIM1_PMU
VSIM2_PMU
VIBR_PMU
VUSB_PMU
VEFUSE_PMU
VRF18_PMU
VCN18_PMU
VCAMD_PMU
VCAMIO_PMU
AVDD18_SOC
VRF12_PMU
DVDD_SRAM_DVFS
VSRAM_OTHERS_PMU
TREF_PMU

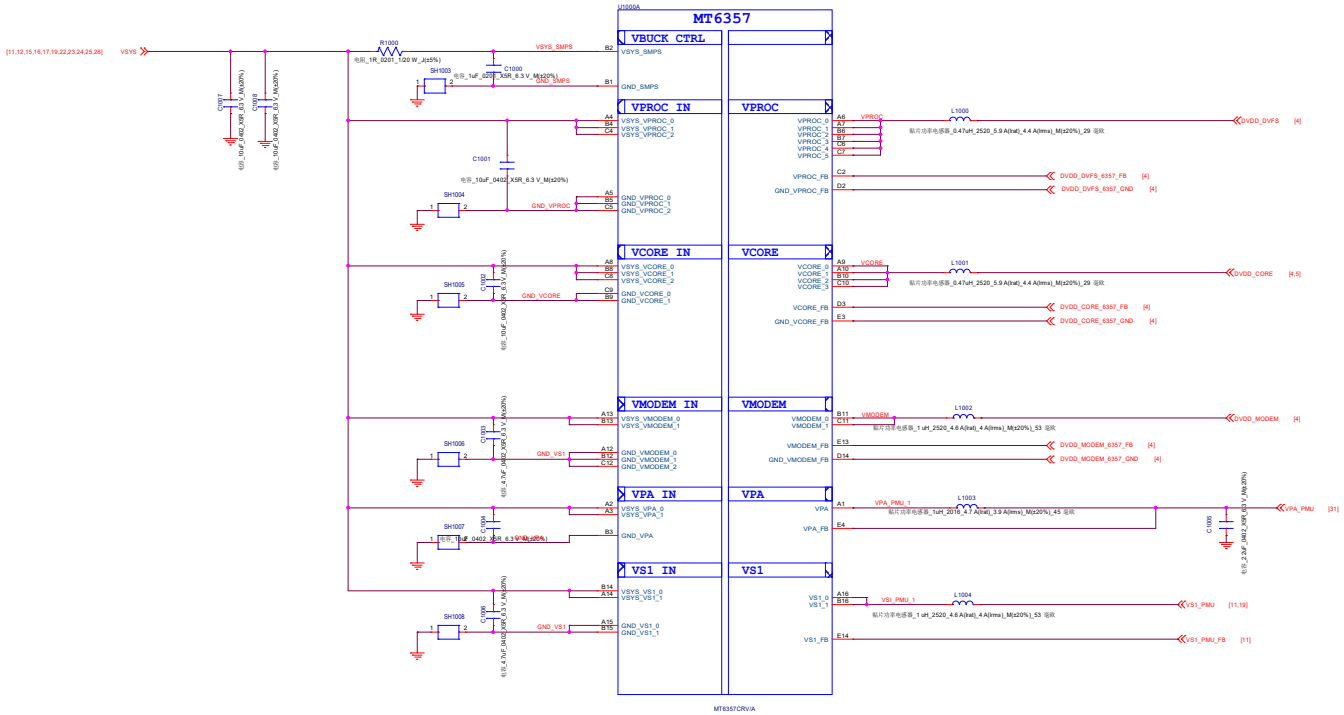
U5000A
MT6357
VBUCK CTRL
VPROC IN
VPROC
VCORE IN
VCORE
VMODEM IN
VMODEM
VPA IN
VPA
VS1 IN
VS1
[11,12,15,16,17,19,22,23,24,25,28]
VSYS
R1000
电阻_1R_0201_1/20 W_±±5%)
VSYS_SMPS
C1000
电容_1uF_0201_X5R_6.3 V_M(±20%)
SH1003
GND_SMPS
C1001
电容_10uF_0402_X5R_6.3 V_M(±20%)
SH1004
GND_VPROC
SH1005
GND_VCORE
SH1006
GND_VS1
SH1007
SH1008
VSYS_SMPS
GND_SMPS
VSYS_VPROC_0
VSYS_VPROC_1
VSYS_VPROC_2
GND_VPROC_0
GND_VPROC_1
GND_VPROC_2
VSYS_VCORE_0
VSYS_VCORE_1
VSYS_VCORE_2
GND_VCORE_0
GND_VCORE_1
VSYS_VMODEM_0
VSYS_VMODEM_1
GND_VMODEM_0
GND_VMODEM_1
GND_VMODEM_2
VSYS_VPA_0
VSYS_VPA_1
GND_VPA
VSYS_VS1_0
VSYS_VS1_1
GND_VS1_0
GND_VS1_1
VPROC_0
VPROC_1
VPROC_2
VPROC_3
VPROC_4
VPROC_5
VPROC_FB
GND_VPROC_FB
VPROC
L1000
贴片功率电感器_0.47uH_2520_5.9 A(Irat)_4.4 A(Irms)_M(±20%)_29 毫欧
DVDD_DVFS [4]
DVDD_DVFS_6357_FB [4]
DVDD_DVFS_6357_GND [4]
VCORE_0
VCORE_1
VCORE_2
VCORE_3
VCORE_FB
GND_VCORE_FB
VCORE
L1001
贴片功率电感器_0.47uH_2520_5.9 A(Irat)_4.4 A(Irms)_M(±20%)_29 毫欧
DVDD_CORE [4,5]
DVDD_CORE_6357_FB [4]
DVDD_CORE_6357_GND [4]
VMODEM_0
VMODEM_1
VMODEM_FB
GND_VMODEM_FB
VMODEM
L1002
贴片功率电感器_1 uH_2520_4.6 A(Irat)_4 A(Irms)_M(±20%)_53 毫欧
DVDD_MODEM_6357_FB [4]
DVDD_MODEM_6357_GND [4]
VPA
VPA_FB
VPA_PMU_1
L1003
贴片功率电感器_1uH_2016_4.7 A(Irat)_3.9 A(Irms)_M(±20%)_45 毫欧
VPA_PMU [31]
C 1005
电容_2.2uF_0402_X5R_6.3 V_M(±20%)
VS1_0
VS1_1
VS1_FB
VSI_PMU_1
L1004
贴片功率电感器_1 uH_2520_4.6 A(Irat)_4 A(Irms)_M(±20%)_53 毫欧
VS1_PMU [11,19]
VS1_PMU_FB [11]
MT6357CRVIA

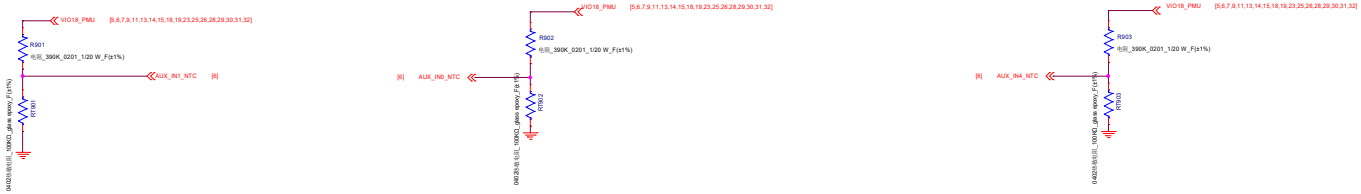
VIO18_PMU
[5,6,7,9,11,13,14,15,18,19,23,25,26,28,29,30,31,32]
R901
电阻_390K_0201_1/20 W_F(±1%)
AUX_IN1_NTC
[8]
R902
0402高精度贴片_390K_0201_1/20 W_F(±1%)
R903
0402高精度贴片_390K_0201_1/20 W_F(±1%)

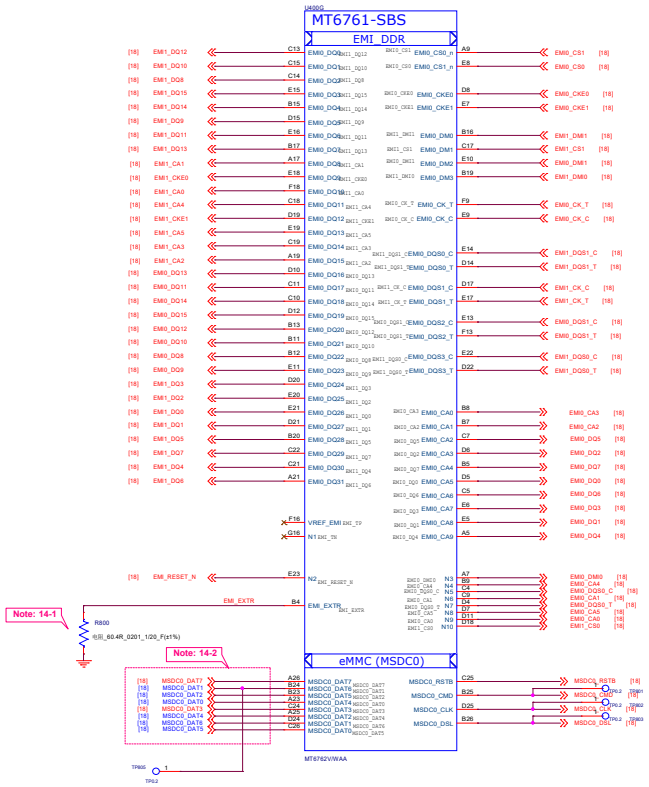
U400G
MT6761-SBS
EMI_DDR
eMMC (MSDC0)
MT6762V/WAA
Note: 14-1
Note: 14-2
R800
ISIII_60.4R_0201_1/20_F(±1%)
EMI_EXTR
EMI_RESET_N
TP805
TP0L2

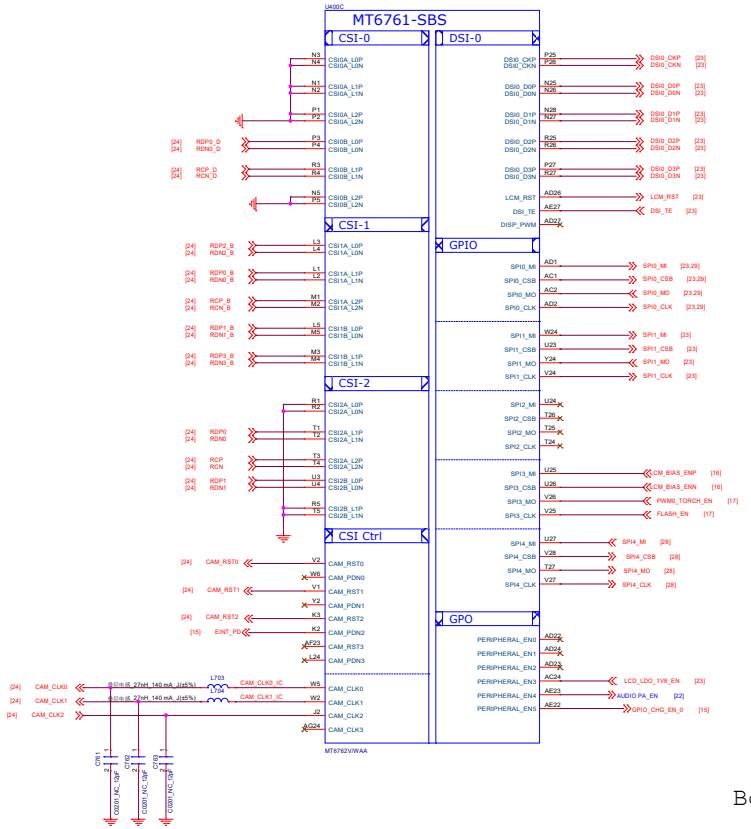
U400C
MT6761-SBS
CSI-0
CSI-1
CSI-2
CSI Ctrl
DSI-0
GPIO
GPO
MT6762VWAA

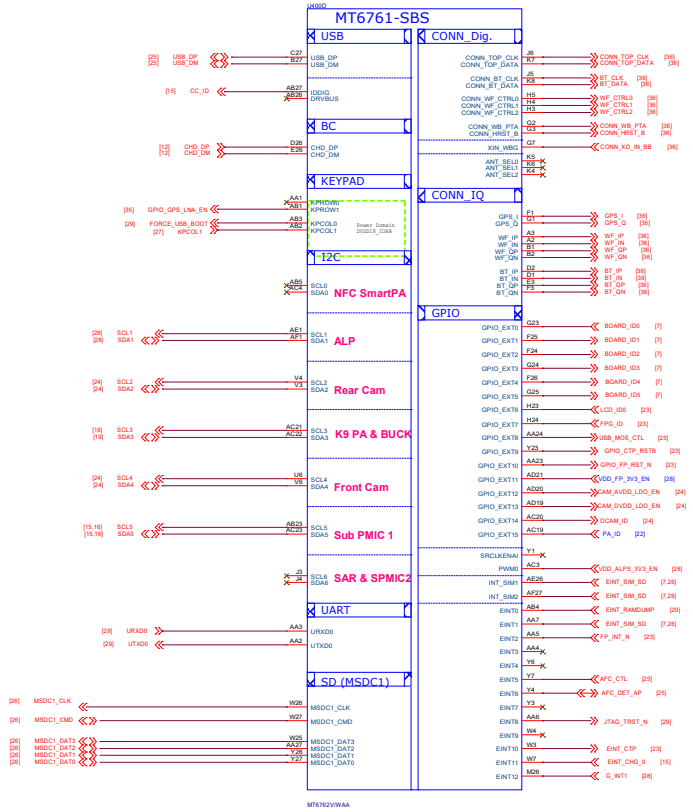
U400D
MT6761-SBS
USB
BC
KEYPAD
I2C
NFC SmartPA
ALP
Rear Cam
K9 PA & BUCK
Front Cam
Sub PMIC 1
SAR & SPMIC2
UART
SD (MSDC1)
CONN_Dig.
CONN_IQ
GPIO
MT6762VWAA

Board ID

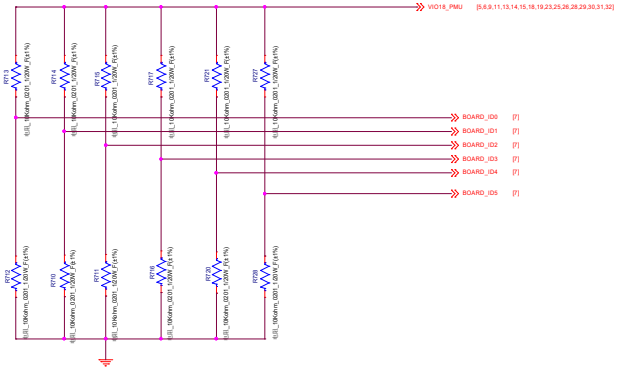
VIO18_PMU
BOARD_ID0
BOARD_ID1
BOARD_ID2
BOARD_ID3
BOARD_ID4
BOARD_ID5

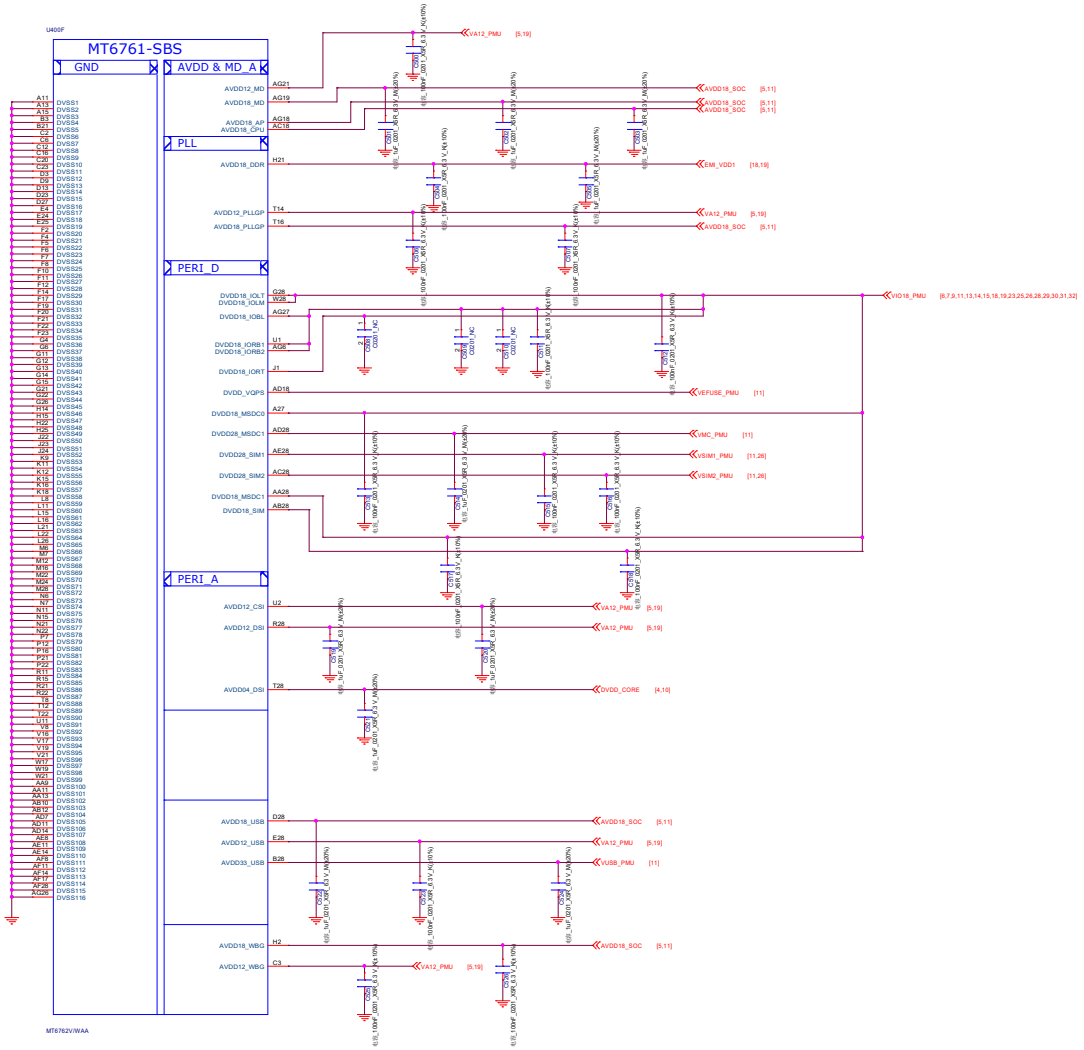
U400F
MT6761-SBS
GND
AVDD & MD_A
PLL
PERI_D
PERI_A
AVDD12_MD
AVDD18_MD
AVDD18_AP
AVDD18_CPU
AVDD18_DDR
AVDD12_PLLGP
AVDD18_PLLGP
DVDD18_IOLT
DVDD18_IOLM
DVDD18_IOBL
DVDD18_IORB1
DVDD18_IORB2
DVDD18_IORT
DVDD_VQPS
DVDD18_MSDC0
DVDD28_MSDC1
DVDD28_SIM1
DVDD28_SIM2
DVDD18_MSDC1
DVDD18_SIM
AVDD12_CSI
AVDD12_DSI
AVDD04_DSI
AVDD18_USB
AVDD12_USB
AVDD33_USB
AVDD18_WBG
AVDD12_WBG
VA12_PMU [5,19]
AVDD18_SOC [5,11]
EMI_VDD1 [18,19]
VIO18_PMU [8,7,9,11,13,14,15,18,19:23,25,26,28,29,30,31,32]
VEFUSE_PMU [11]
VMC_PMU [11]
VSIM1_PMU [11,26]
VSIM2_PMU [11,26]
DVDD_CORE [4,19]
VUSB_PMU [11]
MT6762V/WAA

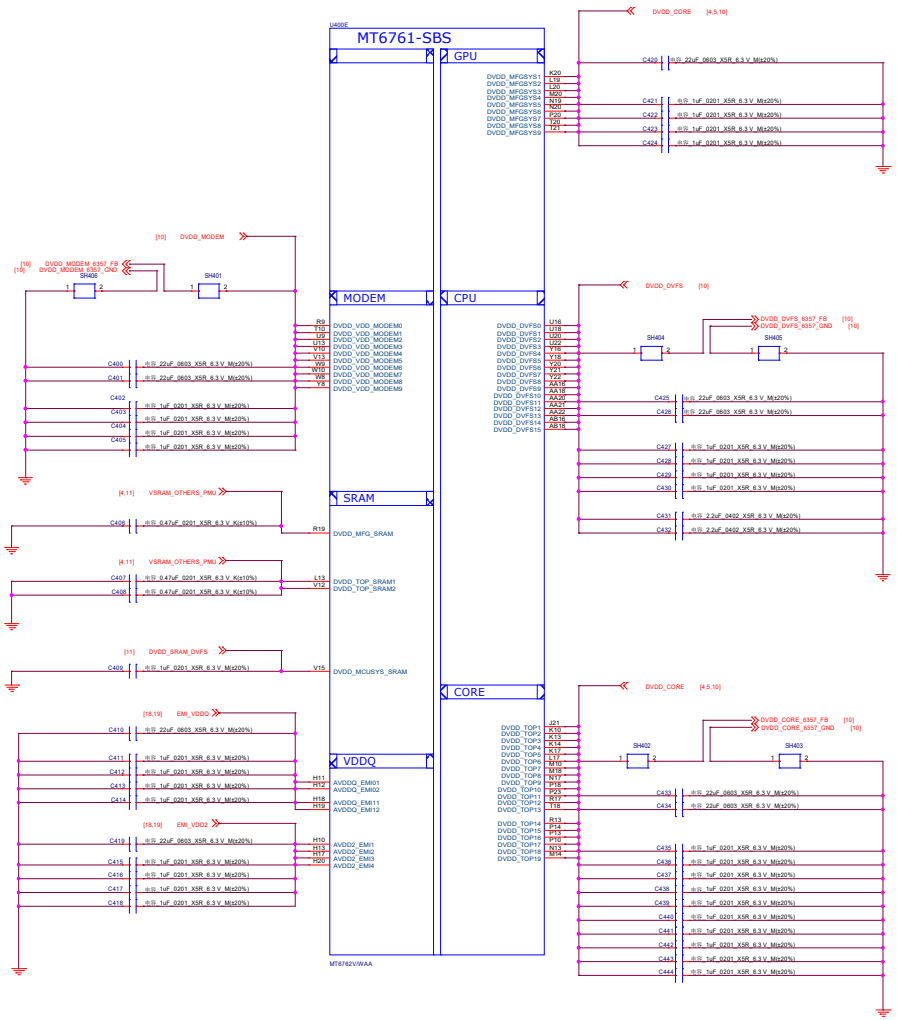
U400E
MT6761-SBS
GPU
MODEM
CPU
SRAM
CORE
VDDQ
MT6762VWAA
DVDD_CORE [4,5,10]
DVDD_MODEM [10]
DVDD_MODEM_6357_FB [10]
DVDD_MODEM_6357_GND [10]
DVDD_DVFS [10]
DVDD_DVFS_6357_FB [10]
DVDD_DVFS_6357_GND [10]
DVDD_CORE_6357_FB [10]
DVDD_CORE_6357_GND [10]
VSRAM_OTHERS_PMU [4,11]
DVDD_SRAM_DVFS [11]
EMI_VDDQ [18,19]
EMI_VDD2 [18,19]
SH401
SH402
SH403
SH404
SH405
SH406
DVDD_MFGSYS1 K20
DVDD_MFGSYS2 L19
DVDD_MFGSYS3 L20
DVDD_MFGSYS4 M20
DVDD_MFGSYS5 N19
DVDD_MFGSYS6 N20
DVDD_MFGSYS7 P20
DVDD_MFGSYS8 P21
DVDD_MFGSYS9 T21
DVDD_VDD_MODEM0 R9
DVDD_VDD_MODEM1 T10
DVDD_VDD_MODEM2 U9
DVDD_VDD_MODEM3 U13
DVDD_VDD_MODEM4 V10
DVDD_VDD_MODEM5 V13
DVDD_VDD_MODEM6 W9
DVDD_VDD_MODEM7 W10
DVDD_VDD_MODEM8 W8
DVDD_VDD_MODEM9 Y8
DVDD_MFG_SRAM R19
DVDD_TOP_SRAM1 L13
DVDD_TOP_SRAM2 V12
DVDD_MCUSYS_SRAM V15
AVDDQ_EMI01 H11
AVDDQ_EMI02 H12
AVDDQ_EMI11 H18
AVDDQ_EMI12 H19
AVDD2_EMI1 H10
AVDD2_EMI2 H13
AVDD2_EMI3 H17
AVDD2_EMI4 H20
DVDD_DVFS0 U16
DVDD_DVFS1 U18
DVDD_DVFS2 U20
DVDD_DVFS3 U22
DVDD_DVFS4 Y18
DVDD_DVFS5 Y20
DVDD_DVFS6 Y21
DVDD_DVFS7 Y22
DVDD_DVFS8 AA16
DVDD_DVFS9 AA18
DVDD_DVFS10 AA20
DVDD_DVFS11 AA21
DVDD_DVFS12 AA22
DVDD_DVFS13 AB16
DVDD_DVFS14 AB18
DVDD_DVFS15 AB19
DVDD_TOP1 J21
DVDD_TOP2 K10
DVDD_TOP3 K13
DVDD_TOP4 K14
DVDD_TOP5 L17
DVDD_TOP6 M10
DVDD_TOP7 M18
DVDD_TOP8 N17
DVDD_TOP9 P18
DVDD_TOP10 P23
DVDD_TOP11 R17
DVDD_TOP12 T18
DVDD_TOP13 R13
DVDD_TOP14 P14
DVDD_TOP15 P13
DVDD_TOP16 P10
DVDD_TOP17 N13
DVDD_TOP18 M14
DVDD_TOP19
C400 22uF_0603_X5R_6.3 V_M(±20%)
C401 22uF_0603_X5R_6.3 V_M(±20%)
C402 1uF_0201_X5R_6.3 V_M(±20%)
C403 1uF_0201_X5R_6.3 V_M(±20%)
C404 1uF_0201_X5R_6.3 V_M(±20%)
C405 1uF_0201_X5R_6.3 V_M(±20%)
C406 0.47uF_0201_X5R_6.3 V_K(±10%)
C407 0.47uF_0201_X5R_6.3 V_K(±10%)
C408 0.47uF_0201_X5R_6.3 V_K(±10%)
C409 1uF_0201_X5R_6.3 V_M(±20%)
C410 22uF_0603_X5R_6.3 V_M(±20%)
C411 1uF_0201_X5R_6.3 V_M(±20%)
C412 1uF_0201_X5R_6.3 V_M(±20%)
C413 1uF_0201_X5R_6.3 V_M(±20%)
C414 1uF_0201_X5R_6.3 V_M(±20%)
C415 1uF_0201_X5R_6.3 V_M(±20%)
C416 1uF_0201_X5R_6.3 V_M(±20%)
C417 1uF_0201_X5R_6.3 V_M(±20%)
C418 1uF_0201_X5R_6.3 V_M(±20%)
C419 22uF_0603_X5R_6.3 V_M(±20%)
C420 22uF_0603_X5R_6.3 V_M(±20%)
C421 1uF_0201_X5R_6.3 V_M(±20%)
C422 1uF_0201_X5R_6.3 V_M(±20%)
C423 1uF_0201_X5R_6.3 V_M(±20%)
C424 1uF_0201_X5R_6.3 V_M(±20%)
C425 22uF_0603_X5R_6.3 V_M(±20%)
C426 22uF_0603_X5R_6.3 V_M(±20%)
C427 1uF_0201_X5R_6.3 V_M(±20%)
C428 1uF_0201_X5R_6.3 V_M(±20%)
C429 1uF_0201_X5R_6.3 V_M(±20%)
C430 1uF_0201_X5R_6.3 V_M(±20%)
C431 2.2uF_0402_X5R_6.3 V_M(±20%)
C432 2.2uF_0402_X5R_6.3 V_M(±20%)
C433 22uF_0603_X5R_6.3 V_M(±20%)
C434 22uF_0603_X5R_6.3 V_M(±20%)
C435 1uF_0201_X5R_6.3 V_M(±20%)
C436 1uF_0201_X5R_6.3 V_M(±20%)
C437 1uF_0201_X5R_6.3 V_M(±20%)
C438 1uF_0201_X5R_6.3 V_M(±20%)
C439 1uF_0201_X5R_6.3 V_M(±20%)
C440 1uF_0201_X5R_6.3 V_M(±20%)
C441 1uF_0201_X5R_6.3 V_M(±20%)
C442 1uF_0201_X5R_6.3 V_M(±20%)
C443 1uF_0201_X5R_6.3 V_M(±20%)
C444 1uF_0201_X5R_6.3 V_M(±20%)

01.Block_Diagram
02.I2C_ID_Overview
03.Index
04.BB_POWER_PDN
05.BB_POWER_IO
06.BB_1_GPIO
07.BB_2_GPIO
08.BB_3_EMI
09.BB_AUXADC
10.POWER_MT6357_Buck
11.POWER_MT6357_LDO
12.POWER_MT6357_IF
13.POWER_MT6357_Audio
14.POWER_BAT_CON
15.CHARGE IC+CC
16.LCD BACKLIGHT+LCD BIAS
17.FLASHLED DRIVER
18.Memory_eMMC_LPDDR3
19.POWER_ThirdParty_Powers
20.Audio_EARJACK
21.Audio_MIC_Receiver
22.Audio_K8 PA
23.LCM_FPS
24.CAMERA
25.LINK
26.SIM_SD
27.SideKey_Flash LED
28.Sensor
29.Test Point_JTAG
30.RF_MT6177_Pin_Out
31.RF_MT6177_RF_TX
32.RF_MT6177_RF_PRX
33.RF_MT6177_RF_DRX
34.RF_ANT
35.WCN_FEM
36.CONNECTIVITY_CONSYS_MT6631
37.SAR_Sensor

I2C Configuration Table

Function	I2C Slave Address(7-bit mode)
Page 15 : Charger IC	
Page 16 : LCM BIAS IC	
Page 21 : SMART PA	
Page 23 : Camera	
E-COMPASS	
ALS&PS SENSOR	
NFC	

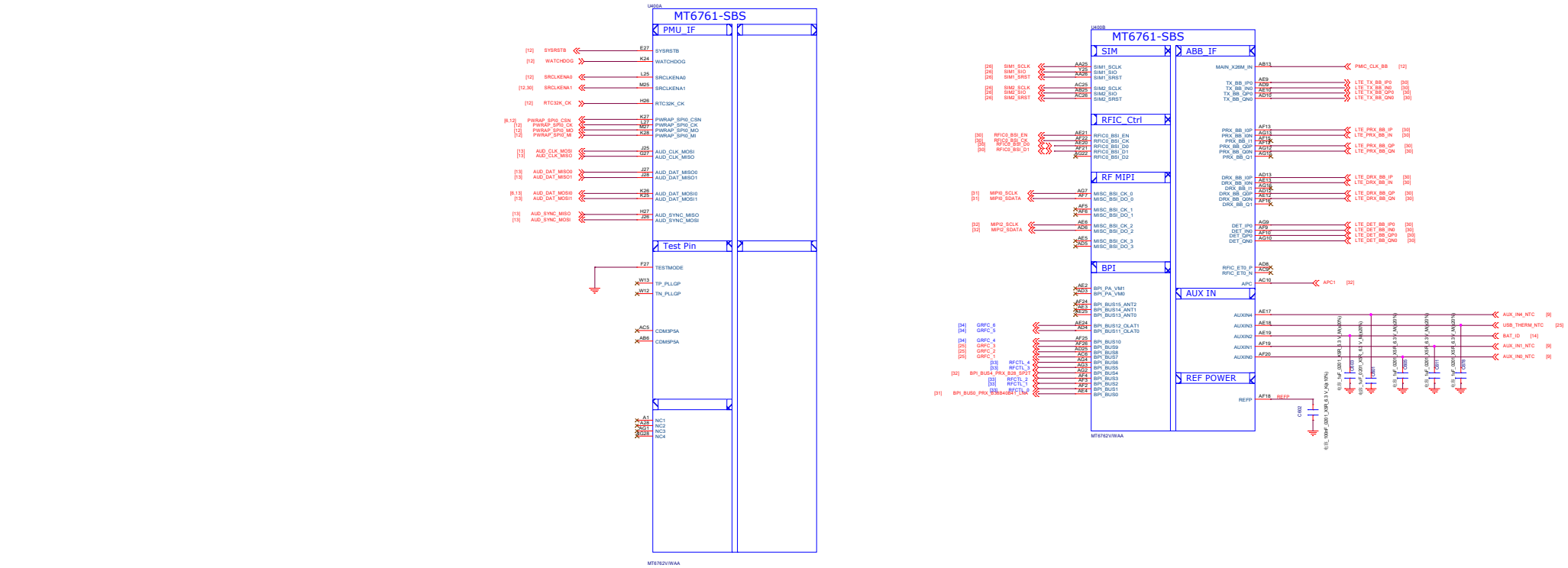
U400A
MT6761-SBS
PMU_IF
[12] SYSRSTB E27 SYSRSTB
[12] WATCHDOG K24 WATCHDOG
[12] SRCLKENA0 L25 SRCLKENA0
[12,30] SRCLKENA1 M25 SRCLKENA1
[12] RTC32K_CK H26 RTC32K_CK
[6,12] PWRAP_SPI0_CSN K27 PWRAP_SPI0_CSN
[12] PWRAP_SPI0_CK L27 PWRAP_SPI0_CK
[12] PWRAP_SPI0_MO M27 PWRAP_SPI0_MO
[12] PWRAP_SPI0_MI K28 PWRAP_SPI0_MI
[13] AUD_CLK_MOSI J25 AUD_CLK_MOSI
[13] AUD_CLK_MISO G27 AUD_CLK_MISO
[13] AUD_DAT_MISO0 J27 AUD_DAT_MISO0
[13] AUD_DAT_MISO1 J26 AUD_DAT_MISO1
[8,13] AUD_DAT_MOSI0 K26 AUD_DAT_MOSI0
[13] AUD_DAT_MOSI1 K25 AUD_DAT_MOSI1
[13] AUD_SYNC_MISO H27 AUD_SYNC_MISO
[13] AUD_SYNC_MOSI J26 AUD_SYNC_MOSI
Test Pin
F27 TESTMODE
W13 TP_PLLGP
W12 TN_PLLGP
AC5 CDM3P5A
AB6 CDM5P5A
A3 NC1
A28 NC2
AG1 NC3
AG28 NC4
MT6762V/WAA
U400B
MT6761-SBS
SIM
[26] SIM1_SCLK AA25 SIM1_SCLK
[26] SIM1_SIO Y25 SIM1_SIO
[26] SIM1_SRST AA26 SIM1_SRST
[26] SIM2_SCLK AG24 SIM2_SCLK
[26] SIM2_SIO AG25 SIM2_SIO
[26] SIM2_SRST AC26 SIM2_SRST
RFIC_Ctrl
[30] RFIC0_BSI_EN AE21 RFIC0_BSI_EN
[30] RFIC0_BSI_CK AE26 RFIC0_BSI_CK
[30] RFIC0_BSI_D0 AF21 RFIC0_BSI_D0
[30] RFIC0_BSI_D1 AG22 RFIC0_BSI_D1
RFIC0_BSI_D2
RF MIPI
[31] MIPI0_SCLK AG7 MISC_BSI_CK_0
[31] MIPI0_SDATA AF7 MISC_BSI_DO_0
AF5 MISC_BSI_CK_1
AE5 MISC_BSI_DO_1
[32] MIPI2_SCLK AE6 MISC_BSI_CK_2
[32] MIPI2_SDATA AD6 MISC_BSI_DO_2
AE5 MISC_BSI_CK_3
AD5 MISC_BSI_DO_3
BPI
AE2 BPI_PA_VM1
AD3 BPI_PA_VM0
AF24 BPI_BUS15_ANT2
AE3 BPI_BUS14_ANT1
AE25 BPI_BUS13_ANT0
[34] GRFC_6 AE24 BPI_BUS12_OLAT1
[34] GRFC_5 AE4 BPI_BUS11_OLAT0
[34] GRFC_4 AF25 BPI_BUS10
[25] GRFC_3 AF26 BPI_BUS9
[25] GRFC_2 AD25 BPI_BUS8
[25] GRFC_1 AC6 BPI_BUS7
[33] RFCTL_4 AG4 BPI_BUS6
[33] RFCTL_3 AG3 BPI_BUS5
[32] BPI_BUS4_PRX_B28_SP21 AG2 BPI_BUS4
[33] RFCTL_2 AF4 BPI_BUS3
[33] RFCTL_1 AF3 BPI_BUS2
[31] BPI_BUS0_PRX_B3_B84SP21_CLK AE4 BPI_BUS1
RFCTL_0
BPI_BUS0
MT6762V/WAA
ABB_IF
MAIN_X26M_IN AB13 PMIC_CLK_BB [12]
TX_BB_IP0 AE9 LTE_TX_BB_IP0 [30]
TX_BB_IN0 AE10 LTE_TX_BB_IN0 [30]
TX_BB_QP0 AD10 LTE_TX_BB_QP0 [30]
TX_BB_QN0 AD9 LTE_TX_BB_QN0 [30]
PRX_BB_IGP AF13 LTE_PRX_BB_IP [30]
PRX_BB_IGN AG13 LTE_PRX_BB_IN [30]
PRX_BB_I1 AF14
PRX_BB_QGP AG14 LTE_PRX_BB_QP [30]
PRX_BB_QGN AG15 LTE_PRX_BB_QN [30]
PRX_BB_Q1 AF15
DRX_BB_IGP AD13 LTE_DRX_BB_IP [30]
DRX_BB_IGN AE13 LTE_DRX_BB_IN [30]
DRX_BB_I1 AG16
DRX_BB_QGP AD12 LTE_DRX_BB_QP [30]
DRX_BB_QGN AE12 LTE_DRX_BB_QN [30]
DRX_BB_Q1 AF16
DET_IP0 AG9 LTE_DET_BB_IP0 [30]
DET_IN0 AF9 LTE_DET_BB_IN0 [30]
DET_QP0 AF10 LTE_DET_BB_QP0 [30]
DET_QN0 AG10 LTE_DET_BB_QN0 [30]
RFIC_ET0_P AD8
RFIC_ET0_N AC9
APC AC10 APC1 [32]
AUX IN
AUXIN4 AE17 AUX_IN4_NTC [9]
AUXIN3 AE18 USB_THERM_NTC [25]
AUXIN2 AE19 BAT_ID [14]
AUXIN1 AF19 AUX_IN1_NTC [9]
AUXIN0 AF20 AUX_IN0_NTC [9]
REF POWER
REFP AF18 REFP
C602
[8,7,9,11,13,14,15,18,19,23,25,26,28,29,30,31,32] VIO18_PMU
[8,12] PWRAP_SPI0_CSN
R601
R601_NC_OK
[8,13] AUD_DAT_MOSI0
R602
@SI_12K_0201_1/20 W_F

EMMC+LPDDR4x

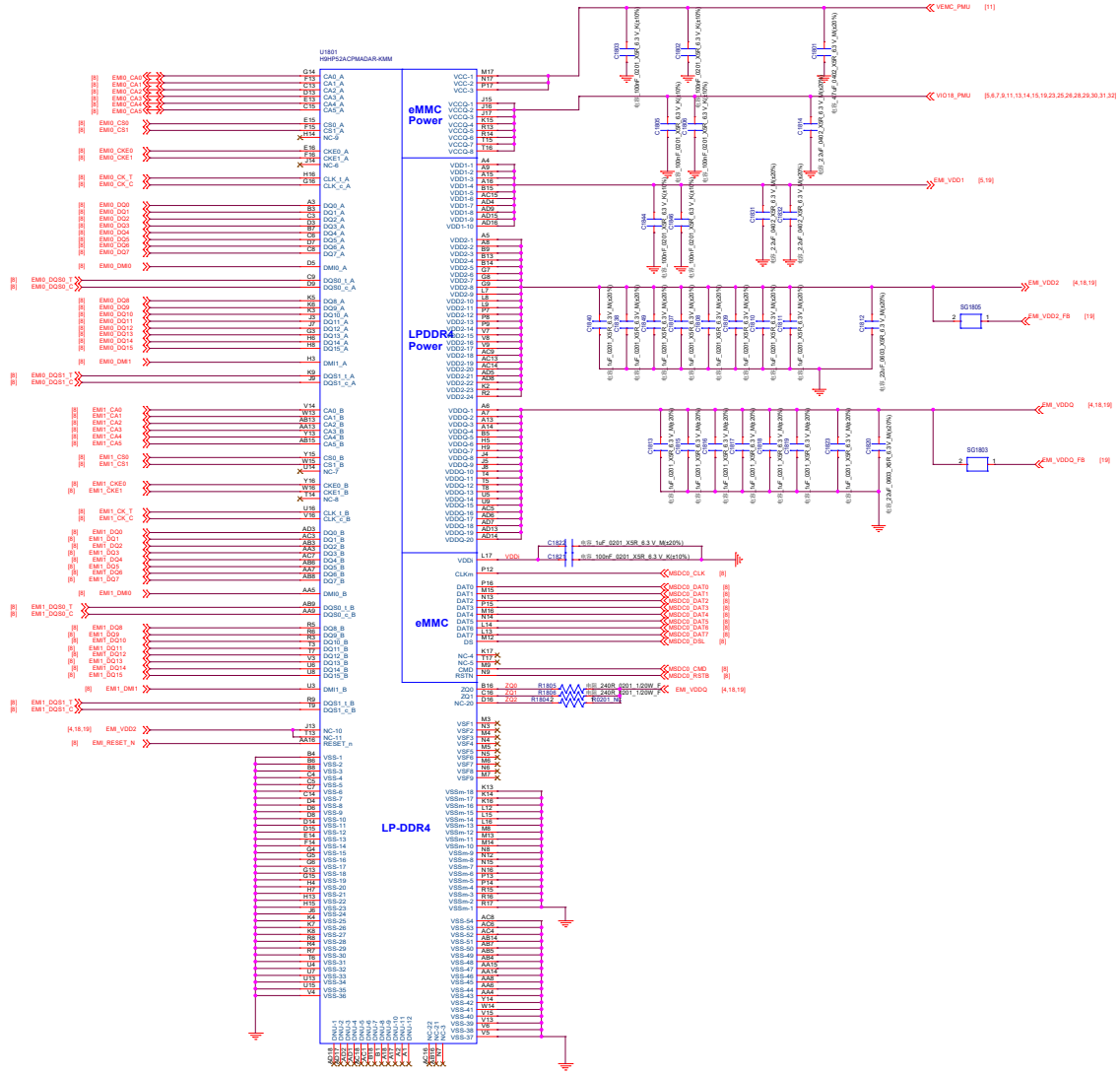

Flash LED for Camera

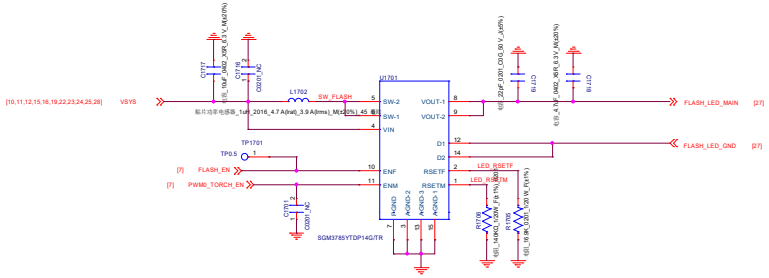

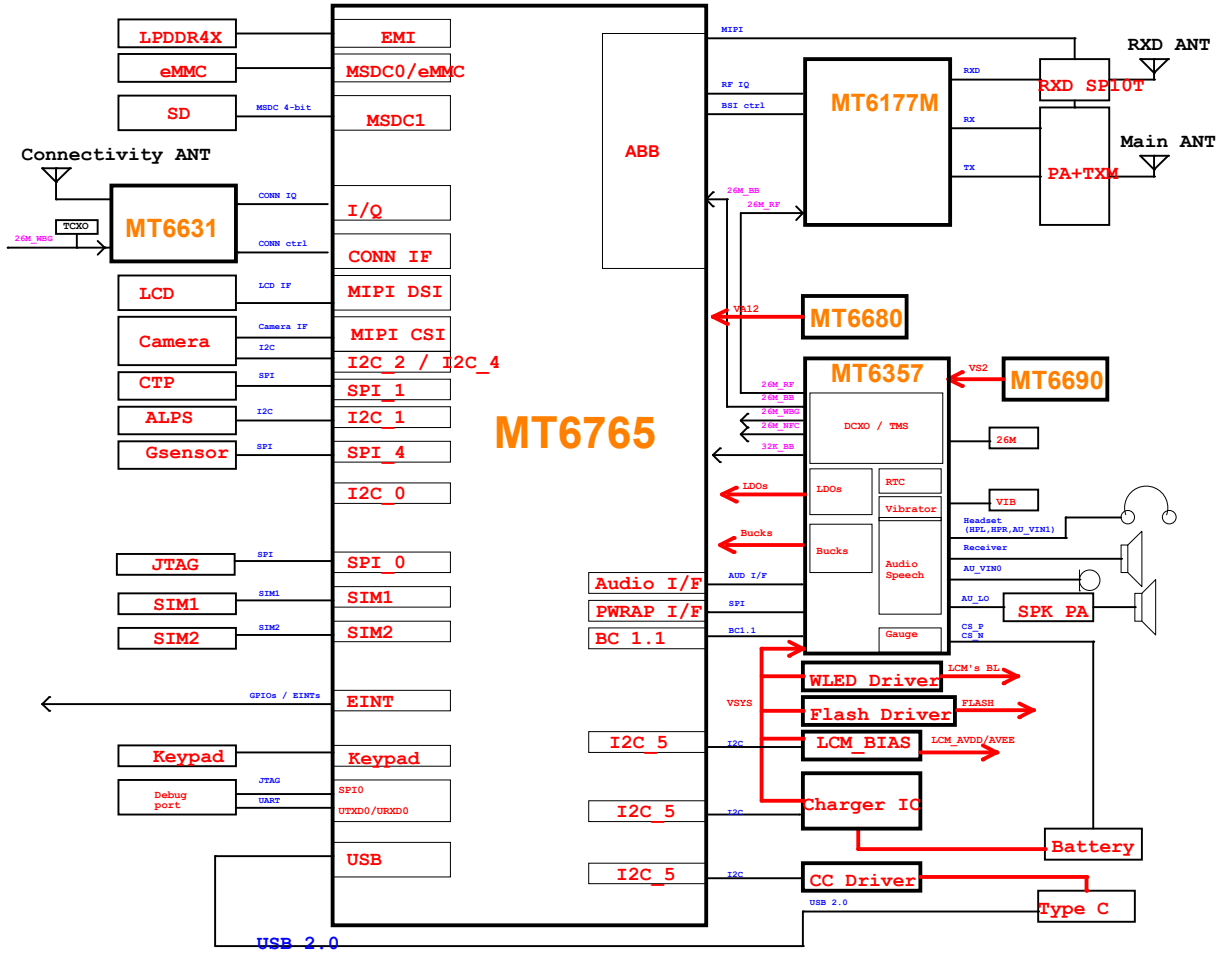
MT6765
LPDDR4X
eMMC
SD
MSDC 4-bit
EMI
MSDC0/eMMC
MSDC1
Connectivity ANT
MT6631
TCXO
26M_WBG
CONN IQ
CONN ctrl
I/Q
CONN IF
LCD
LCD IF
MIPI DSI
Camera
Camera IF
MIPI CSI
I2C
I2C_2 / I2C_4
CTP
SPI
SPI_1
ALPS
I2C
I2C_1
Gsensor
SPI
SPI_4
I2C_0
JTAG
SPI
SPI_0
SIM1
SIM1
SIM1
SIM2
SIM2
SIM2
GPIOs / EINTs
EINT
Keypad
Keypad
Debug port
JTAG
UART
SPI0
UTXD0/URXD0
USB
USB 2.0
ABB
Audio I/F
PWRAP I/F
BC 1.1
I2C_5
I2C_5
I2C_5
MIPI
RF IQ
BSI ctrl
MT6177M
RXD
RX
TX
RXD SPLIT
PA+TXM
RXD ANT
Main ANT
26M_BB
26M_RF
VA12
MT6680
MT6357
VS2
MT6690
26M_RF
26M_BB
26M_WBG
26M_RTC
32K_BB
DCXO / TMS
26M
LDOs
RTC
Vibrator
VIB
Bucks
Audio Speech
Gauge
Headset (HPL,HPR,AU_VIN1)
Receiver
AU_VIN0
AU_LO
SPK PA
CS_P
CS_N
AUD I/F
SPI
BC1.1
VSYS
I2C
WLED Driver
LCM's BL
Flash Driver
FLASH
LCM_BIAS
LCM_AVDD/AVEE
Charger IC
Battery
CC Driver
USB 2.0
Type C

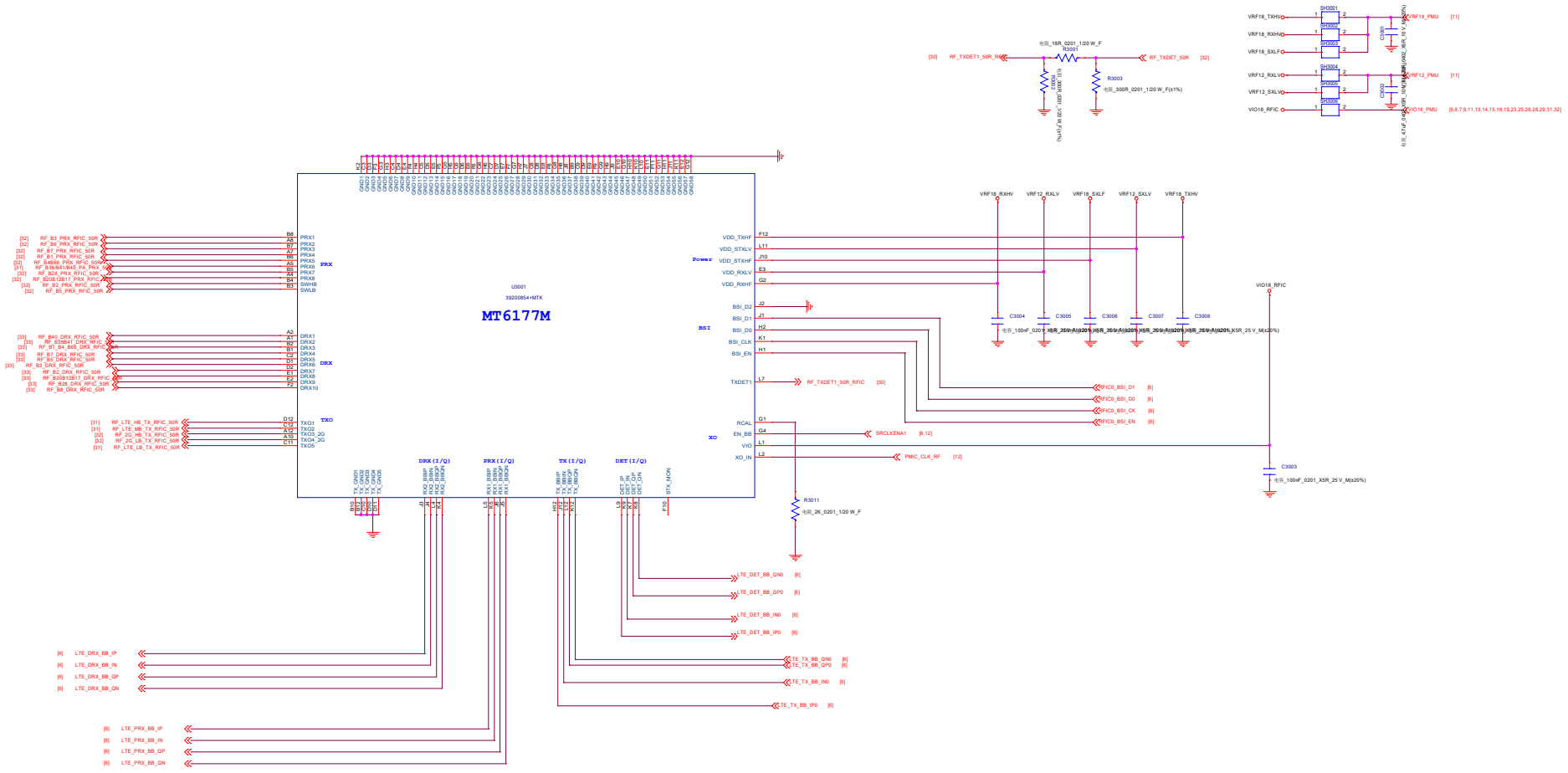
MT6177M
U3001
39200854+MTK
PRX
DRX
TXO
Power
BSI
XO
DRX (I/Q)
PRX (I/Q)
TX (I/Q)
DET (I/Q)
VRF18_RXHV
VRF12_RXLV
VRF18_SXLF
VRF12_SXLV
VRF18_TXHV
VIO18_RFIC
RF_TXDET1_50R_RFIC
RF_TXDET1_50R
SRCLKENA1
PMIC_CLK_RF
RFIC0_BSI_D1
RFIC0_BSI_D0
RFIC0_BSI_CK
RFIC0_BSI_EN
LTE_DET_BB_QN0
LTE_DET_BB_QP0
LTE_DET_BB_IN0
LTE_DET_BB_IP0
LTE_TX_BB_QN0
LTE_TX_BB_QP0
LTE_TX_BB_IN0
LTE_TX_BB_IP0
LTE_DRX_BB_IP
LTE_DRX_BB_IN
LTE_DRX_BB_QP
LTE_DRX_BB_QN
LTE_PRX_BB_IP
LTE_PRX_BB_IN
LTE_PRX_BB_QP
LTE_PRX_BB_QN
R3001
R3003
R3011
C3003
C3004
C3005
C3006
C3007
C3008
C1001
C1002
SH3001
SH3002
SH3003
SH3004
SH3005
SH3006
VRF18_PMU
VRF12_PMU
VIO18_PMU

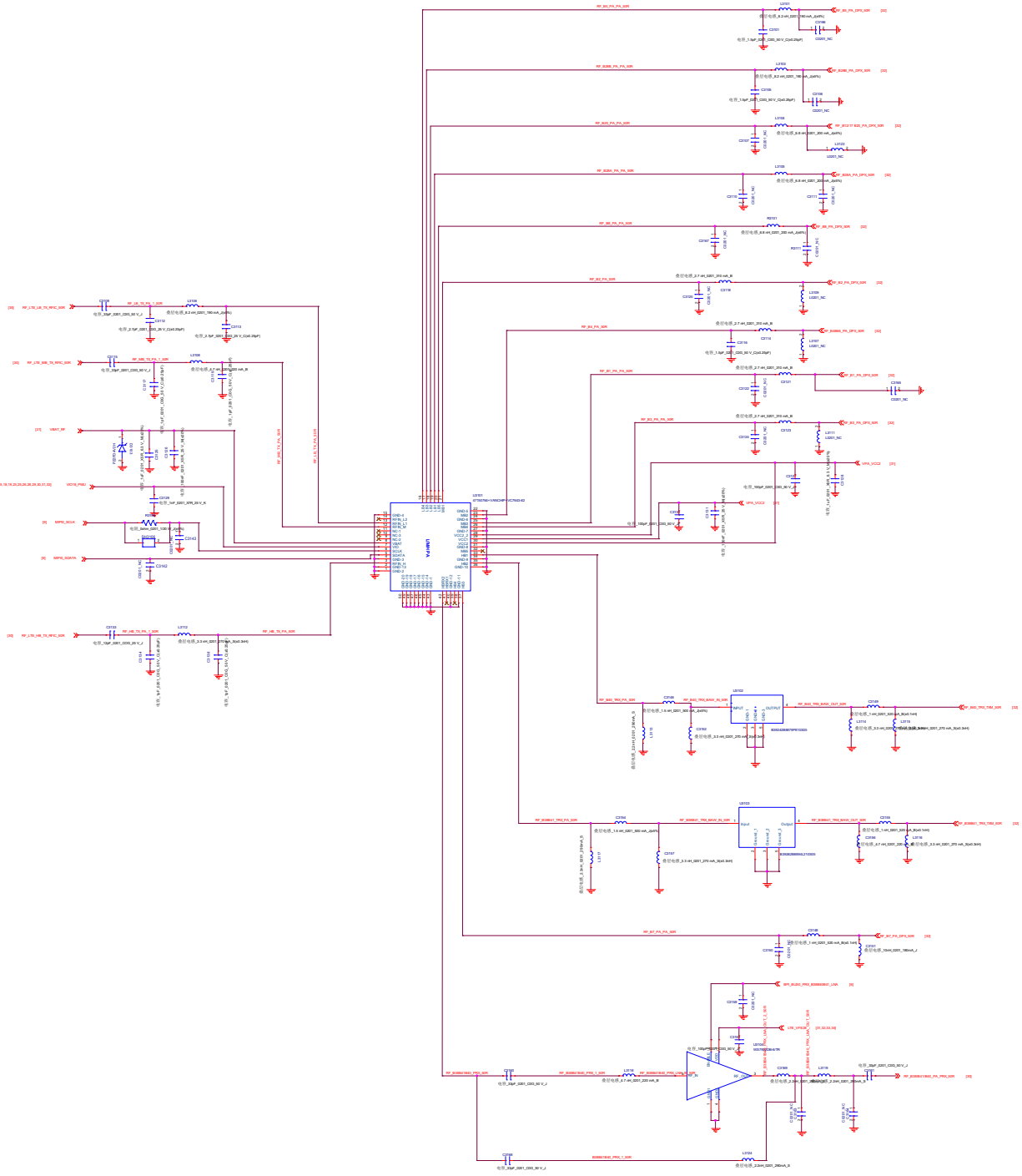

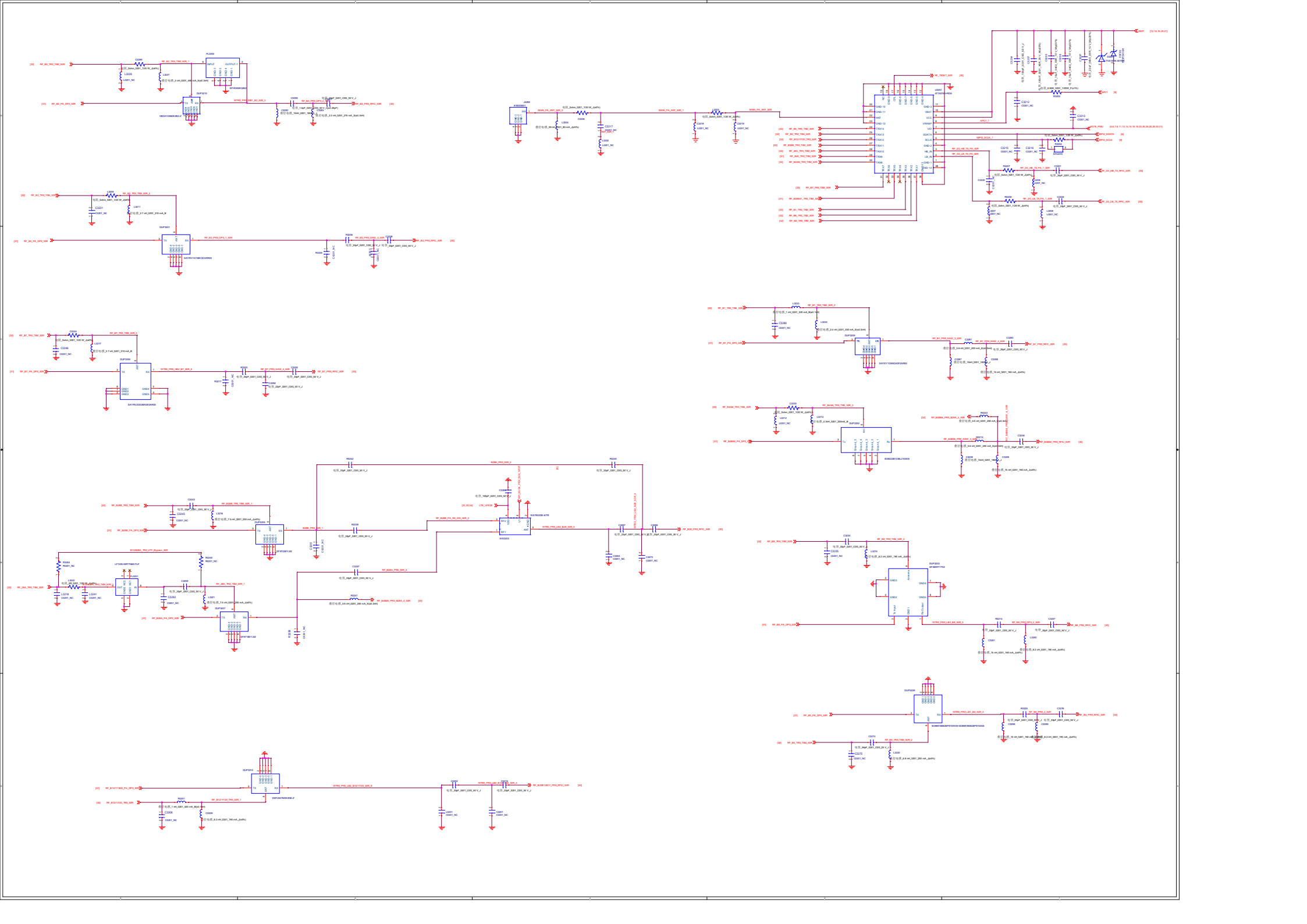

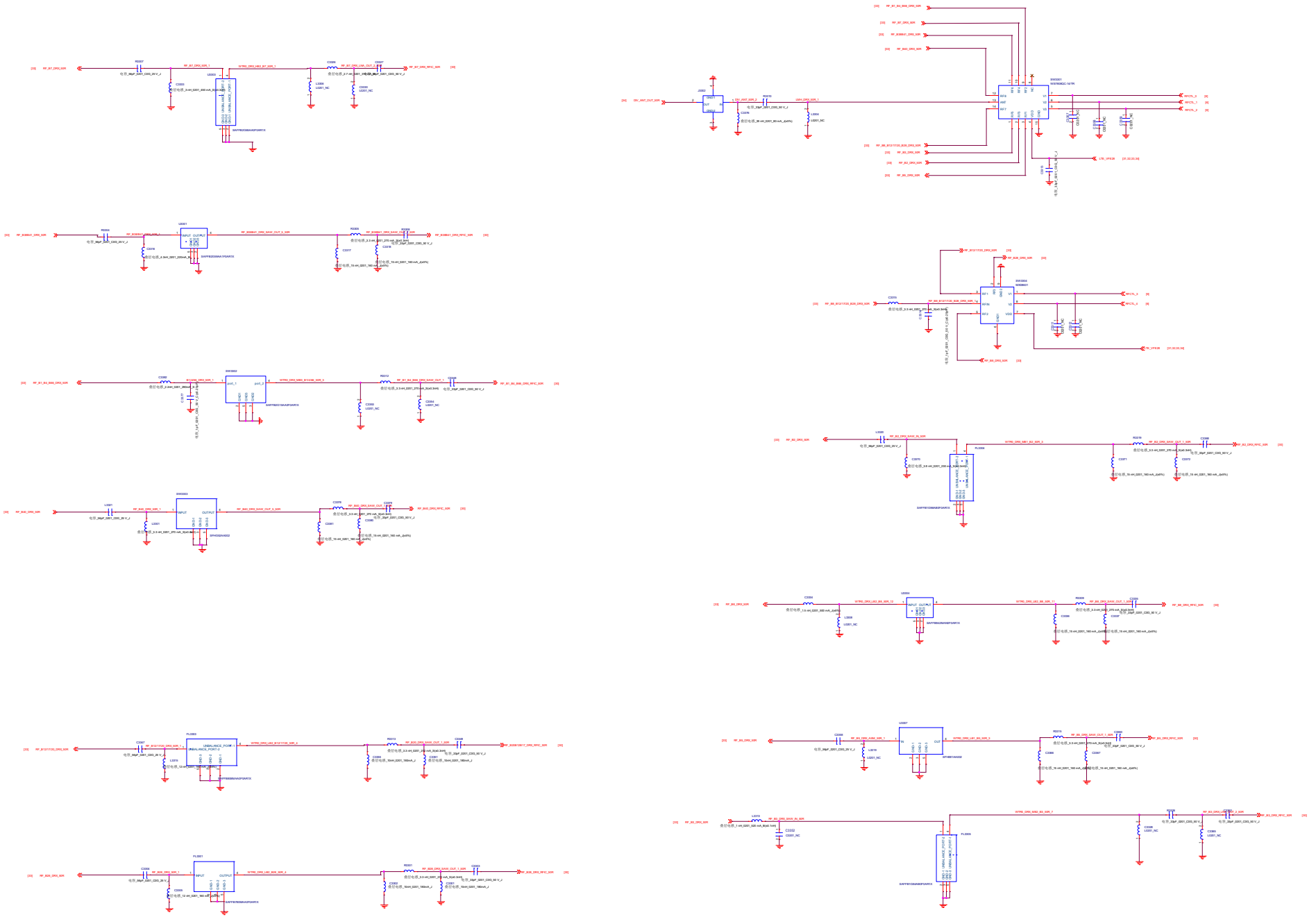

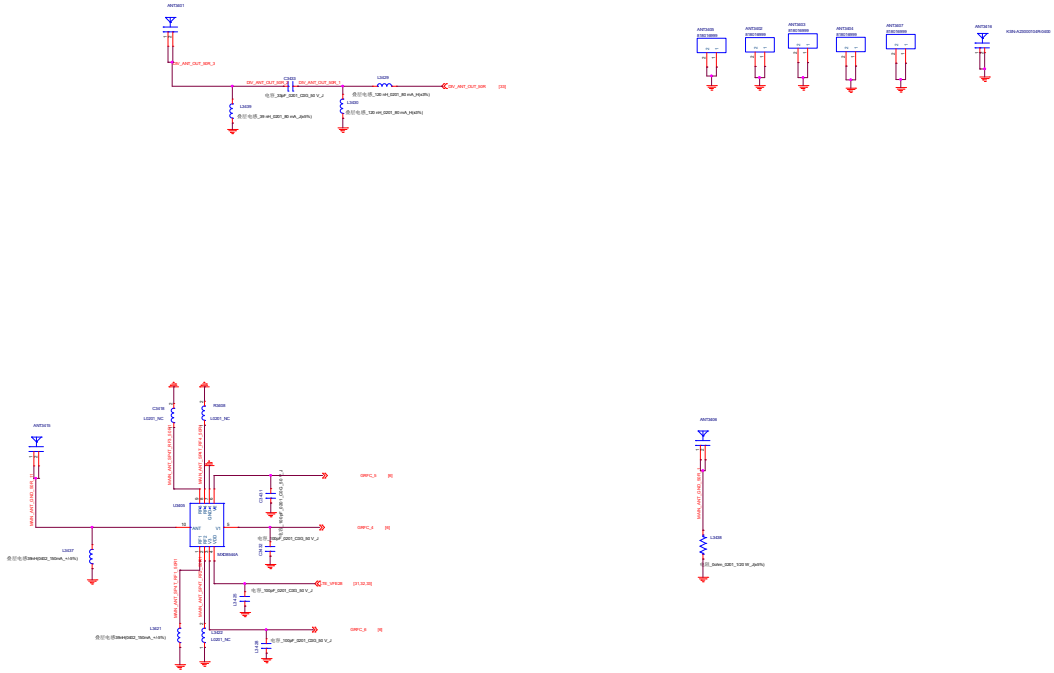
ANT3601
ANT3602
ANT3603
ANT3604
ANT3607
ANT3610
ANT3608
ANT3609
C3610
C3609
L3609
L3608
L3607
L3606
L3605
L3604
L3603
L3602
L3601
U3605
R3608
C3610
C3609
C3608
C3607
C3606
C3605
C3604
C3603
C3602
C3601
ANT3616
ANT3615
ANT3606

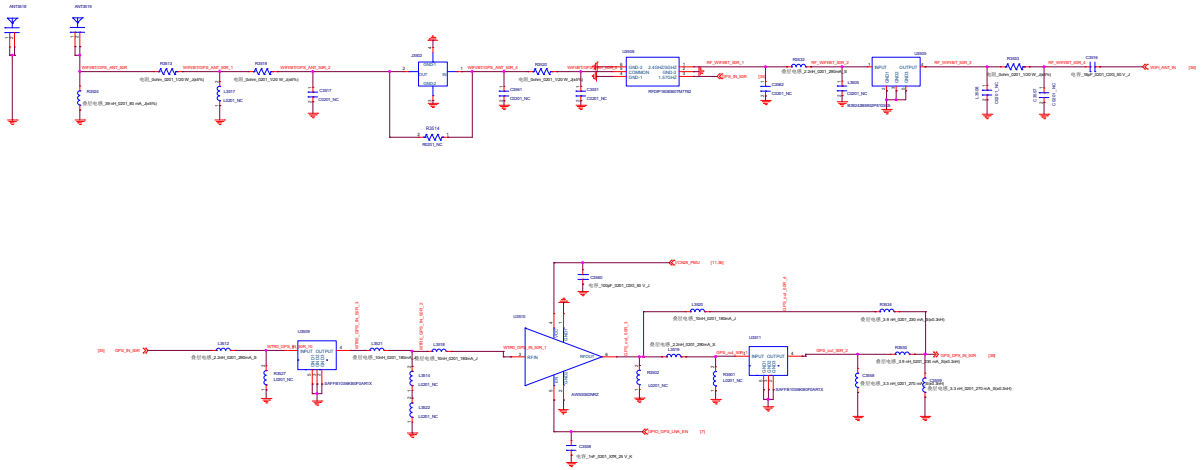
ANT3010
ANT3010
WIFI/BT/GPS_ANT_SDR
R3012
电阻_0ohm_0201_1/20 W_(0402)
WIFI/BT/GPS_ANT_SDR_1
R3015
电阻_0ohm_0201_1/20 W_(0402)
WIFI/BT/GPS_ANT_SDR_2
L3017
L0201_NC
C3017
C0201_NC
R3004
叠层电感_39-nH_0201_80 mA_(0402)
J3002
J3003
J3002
R3014
R0402_NC
WIFI/BT/GPS_ANT_SDR_4
R3005
电阻_0ohm_0201_1/20 W_(0402)
WIFI/BT/GPS_ANT_SDR_3
C3001
C0201_NC
C3003
C0201_NC
U3009
GND-2
COMMON
GND-1
2.4GHz/5GHz
GND-3
1.5/5GHz
RF2DP1630B0017M7TR2
RF_WIFI/BT_SDR_1
WIFI_IN_SDR
R3032
RF_WIFI/BT_SDR_2
叠层电感_2.4nH_0201_250mA
C3002
C0201_NC
L3005
C0201_NC
U3005
INPUT
OUTPUT
GND1
GND2
GND3
B3SG4C8B0BGPFTR7
RF_WIFI/BT_SDR_3
R3003
RF_WIFI/BT_SDR_4
C3016
电阻_0ohm_0201_1/20 W_(0402)
电容_1pF_0201_C0G_50 V_J
C3015
C0201_NC
C3018
C0201_NC
WIFI_ANT_IN
[36]
C3020_PMU
[11,36]
C3060
电容_100pF_0201_C0G_50 V_J
L3002
叠层电感_10nH_0201_180mA_J
WIFI_out_SDR_4
R3002
叠层电感_3.9-nH_0201_200 mA_(0402-3nH)
[36]
GPS_IN_SDR
L3012
叠层电感_2.2nH_0201_280mA_N
WIFI_GPS_IN_SDR_10
U3009
INPUT
OUTPUT
GND1
GND2
GND3
B3FF8103B0B0PGARTX
R3027
L0201_NC
WIFI_GPS_IN_SDR_3
L3001
叠层电感_10nH_0201_180mA_J
WIFI_GPS_IN_SDR_2
L3016
叠层电感_10nH_0201_180mA_J
L3014
L0201_NC
L3022
L0201_NC
U3010
WIFI_GPS_IN_SDR_1
RF IN
VDD1
VDD2
RF OUT
AVN0202NRZ
GPS_out_SDR_3
L3006
叠层电感_2.2nH_0201_280mA_N
R3002
L0201_NC
R3001
L0201_NC
U3011
INPUT
OUTPUT
GND1
GND2
GND3
B3FF8103B0B0PGARTX
GPS_out_SDR_2
R3007
叠层电感_3.9-nH_0201_200 mA_(0402-3nH)
GPS_GPS_IN_SDR
[36]
C3008
叠层电感_3.3-nH_0201_270 mA_(0402-3nH)
C3009
0.5PF
C0201
GPS_GPS_LNA_EN
[7]
C3008
电容_1pF_0201_X7R_25 V_K

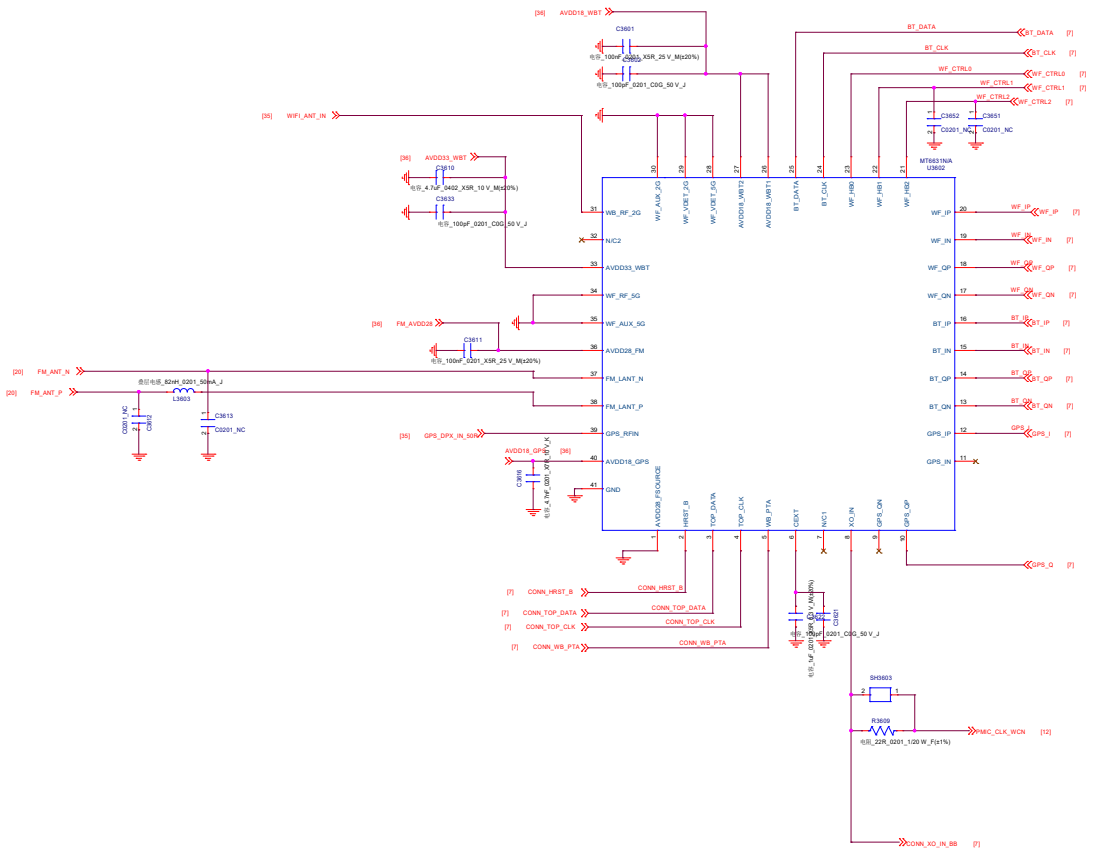
MT6631NIA
U3602
[36] AVDD18_WBT
C3601
电容_100nF_0201_X5R_25 V_M(±20%)
C3602
电容_100pF_0201_C0G_50 V_J
BT_DATA
BT_CLK
WF_CTRL0
WF_CTRL1
WF_CTRL2
C3652
C3651
C0201_NC
[35] WIFI_ANT_IN
[36] AVDD33_WBT
C3610
电容_4.7uF_0402_X5R_10 V_M(±20%)
C3633
电容_100pF_0201_C0G_50 V_J
WB_RF_2G
NC2
AVDD33_WBT
WF_RF_5G
WF_AUX_5G
AVDD28_FM
FM_LANT_N
FM_LANT_P
GPS_RFIN
AVDD18_GPS
GND
WF_AUX_2G
WF_VBE1_2G
WF_VBE1_5G
AVDD18_WB12
AVDD18_WB11
BT_DATA
BT_CLK
WF_HB0
WF_HB1
WF_HB2
WF_IP
WF_IN
WF_QP
WF_QN
BT_IP
BT_IN
BT_QP
BT_QN
GPS_IP
GPS_IN
[36] FM_AVDD28
C3611
电容_100nF_0201_X5R_25 V_M(±20%)
[20] FM_ANT_N
[20] FM_ANT_P
叠层电感_82nH_0201_500mA_J
L3603
C0201_NC
C3613
C0201_NC
[35] GPS_DPX_IN_50Ω
AVDD18_GPS
[36]
C3616
电容_4.7nF_0201_X7R_10 V_K
AVDD28_FSOURCE
HRST_B
TOP_DATA
TOP_CLK
WB_PTA
CEXT
NC1
XO_IN
GPS_QN
GPS_QP
GPS_Q
[7] CONN_HRST_B
CONN_HRST_B
[7] CONN_TOP_DATA
CONN_TOP_DATA
[7] CONN_TOP_CLK
CONN_TOP_CLK
[7] CONN_WB_PTA
CONN_WB_PTA
C3621
电容_100nF_0201_C0G_50 V_J
电容_1uF_0201_X5R_6.3 V_M(±20%)
SH3603
R3639
电阻_22R_0201_1/20 W_F(±1%)
PMIC_CLK_WCN [12]
CONN_XO_IN_BB [7]

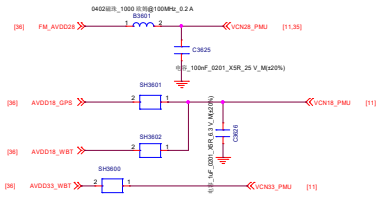
0402磁珠_1000 欧姆@100MHz_0.2 A
B3601
[36] FM_AVDD28
VCN28_PMU [11,35]
C3625
电容_100nF_0201_X5R_25 V_M(±20%)
SH3601
[36] AVDD18_GPS
VCN18_PMU [11]
SH3602
[36] AVDD18_WBT
C3628
电容_1uF_0201_X5R_6.3 V_M(±20%)
SH3600
[36] AVDD33_WBT
VCN33_PMU [11]

TYPEC CONNECTOR

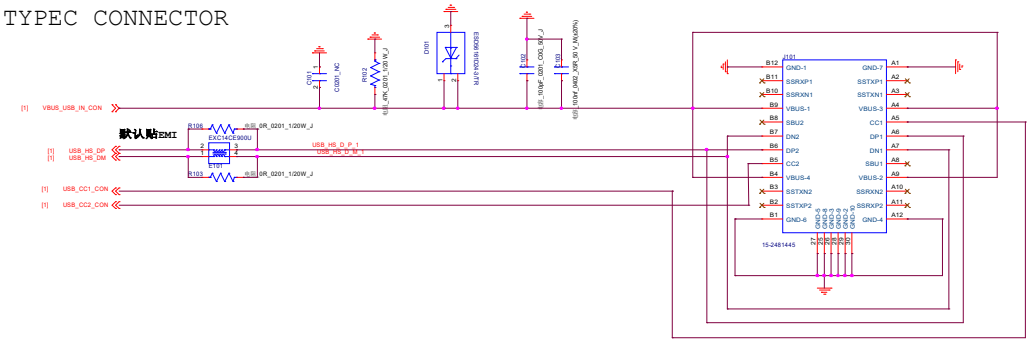

MAIN FPC BTB

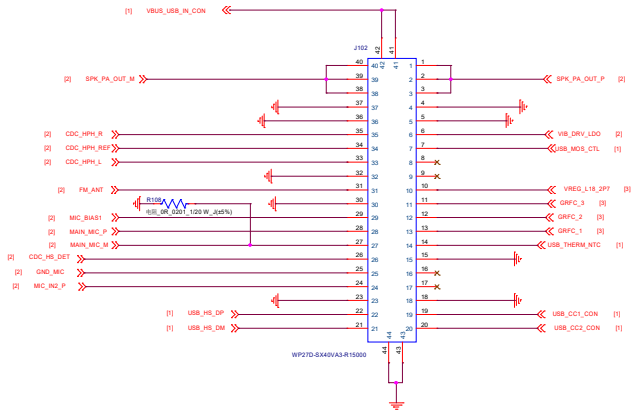

USB NTC

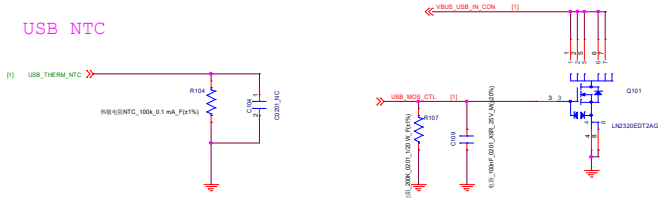

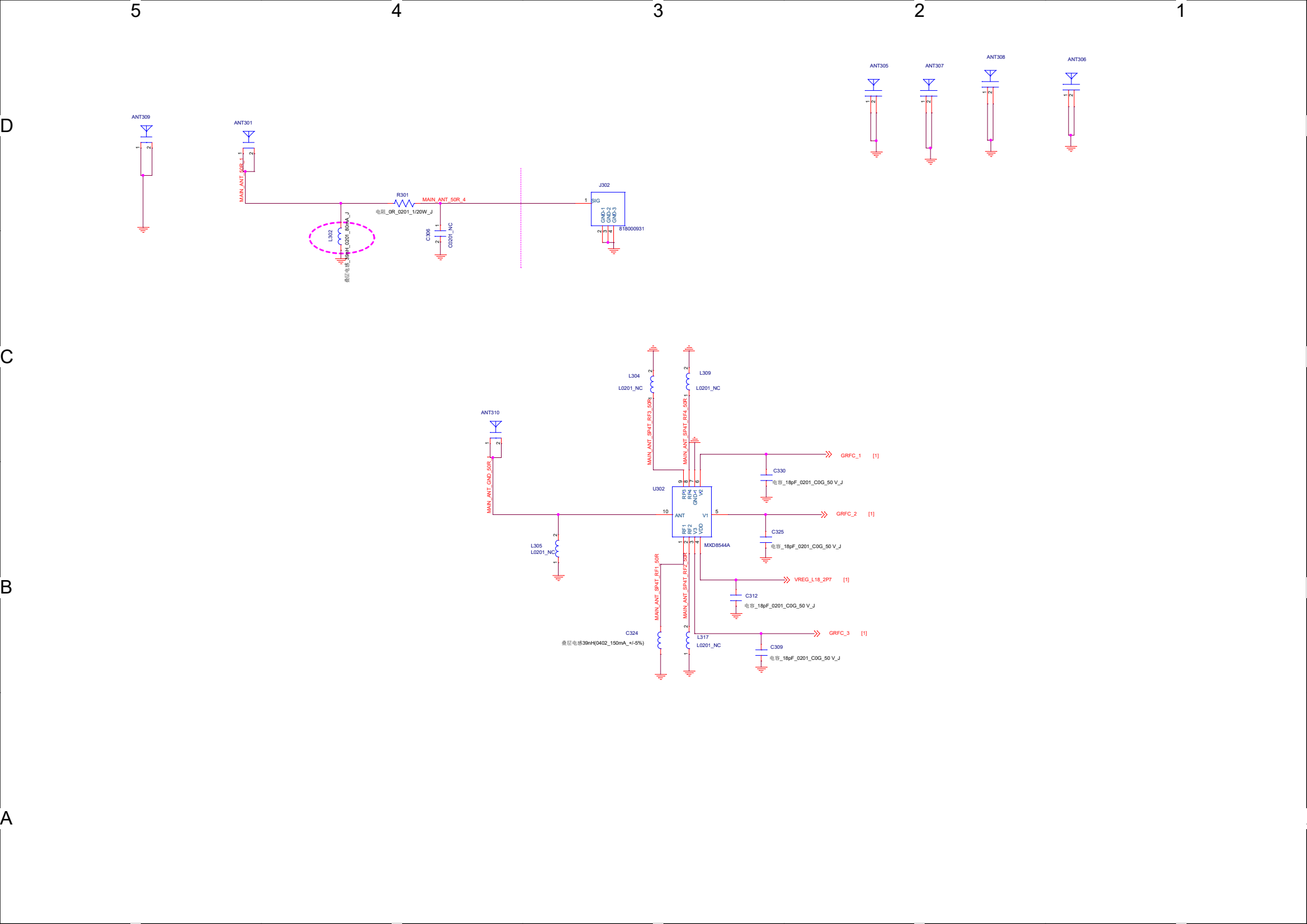
5
4
3
2
1
D
C
B
A
ANT309
ANT301
MAIN_ANT_50R_1
R301
电阻_0R_0201_1/20W_J
MAIN_ANT_50R_4
L302
叠层电感_39nH_0201_80mA_J
C306
C0201_NC
J302
SIG
GND-1
GND-2
GND-3
818000931
ANT305
ANT307
ANT308
ANT306
ANT310
MAIN_ANT_GND_50R
L304
L0201_NC
L309
L0201_NC
MAIN_ANT_SP4T_RF3_50R
MAIN_ANT_SP4T_RF4_50R
U302
RF3
RF4
GND-1
V2
ANT
V1
RF1
RF2
V3
VDD
MXD8544A
L305
L0201_NC
MAIN_ANT_SP4T_RF1_50R
MAIN_ANT_SP4T_RF2_50R
C324
叠层电感39nH(0402_150mA_+/-5%)
L317
L0201_NC
GRFC_1 [1]
C330
电容_18pF_0201_C0G_50 V_J
GRFC_2 [1]
C325
电容_18pF_0201_C0G_50 V_J
VREG_L18_2P7 [1]
C312
电容_18pF_0201_C0G_50 V_J
GRFC_3 [1]
C309
电容_18pF_0201_C0G_50 V_J

主MIC

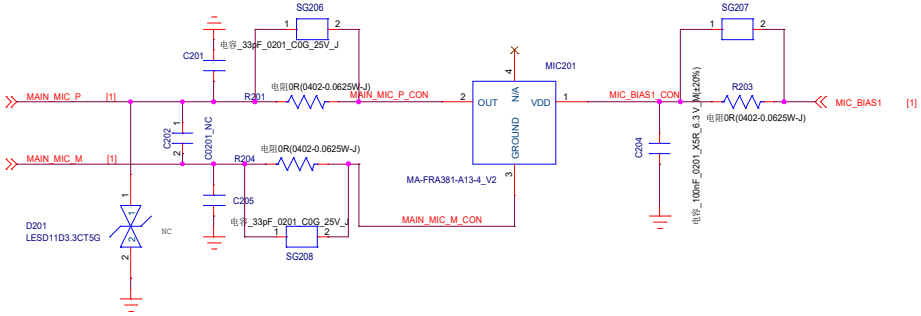

主MIC shielding

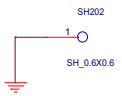

MOTOR

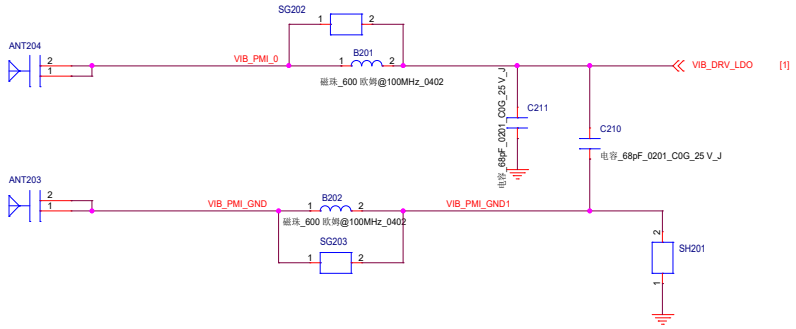

SPK

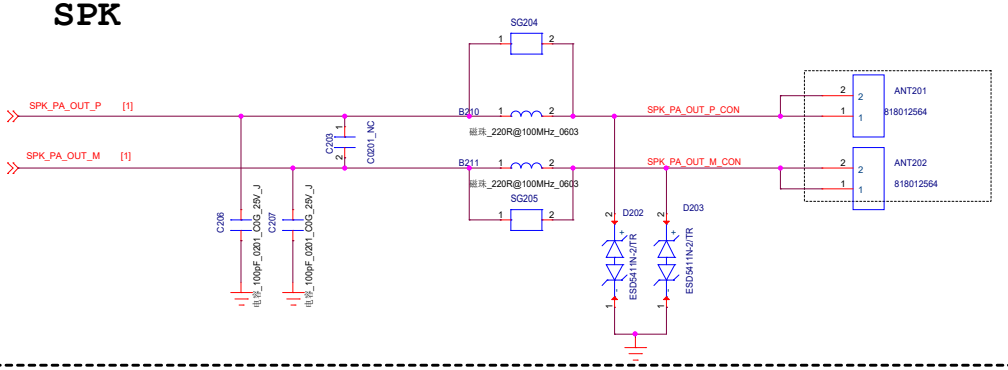

Headset

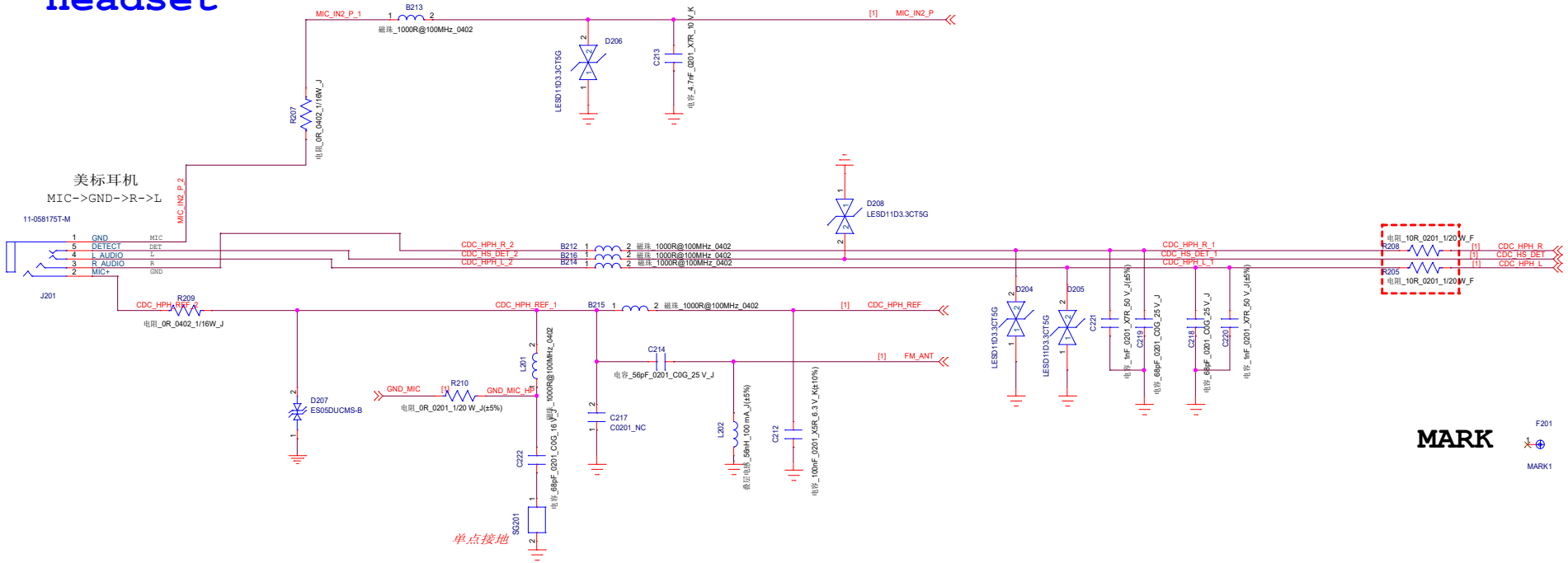

MARK

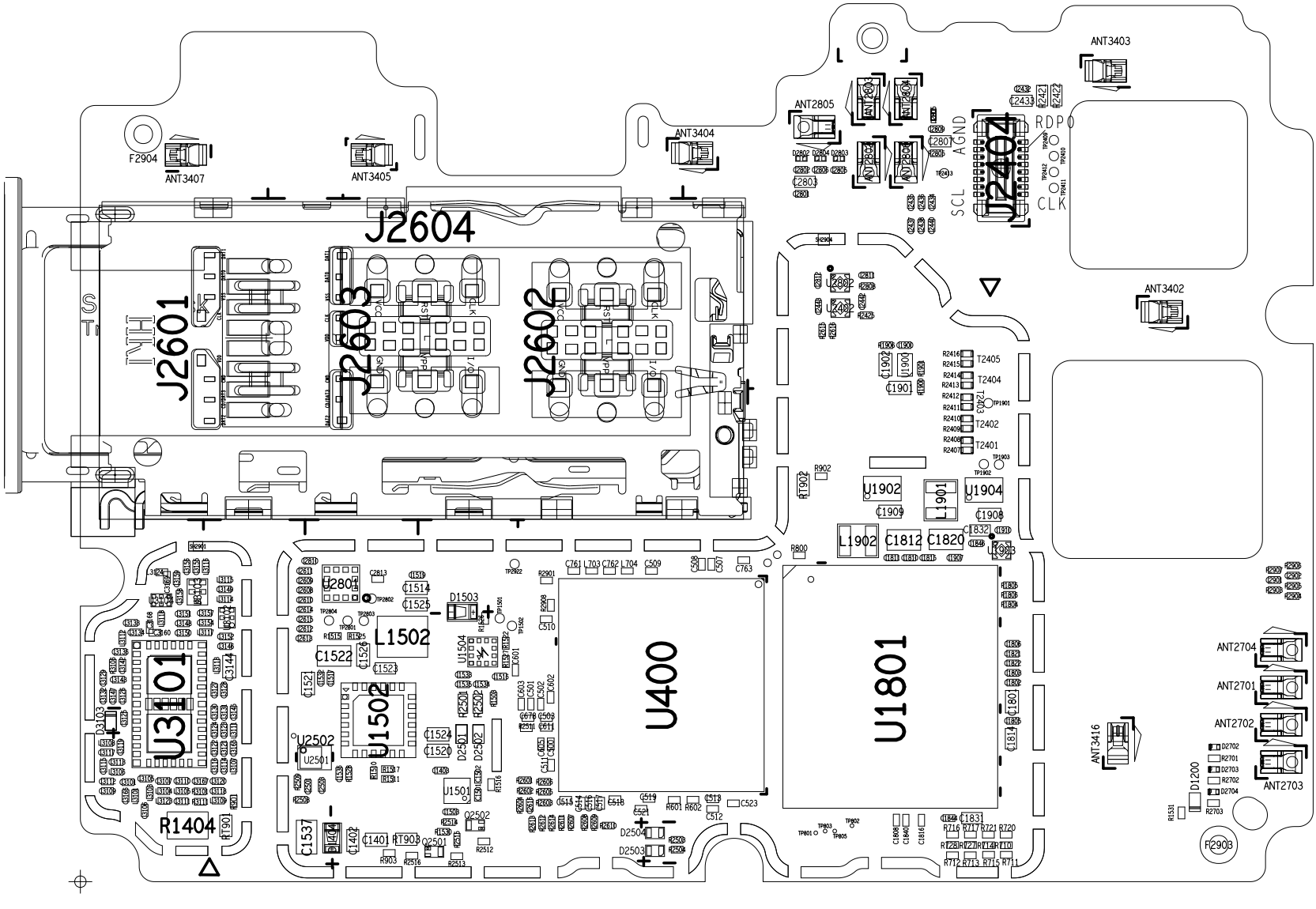
J2604
J2601
J2603
J2602
J2404
U400
U1801
U3101
U1502
U1902
U1904
L1901
L1902
L1502
ANT3403
ANT3404
ANT3405
ANT3407
ANT2805
ANT3402
ANT2704
ANT2701
ANT2702
ANT2703
ANT3416
F2904
F2903
R1404
D1503
D1200
SCL
AGND
RDP0
CLK

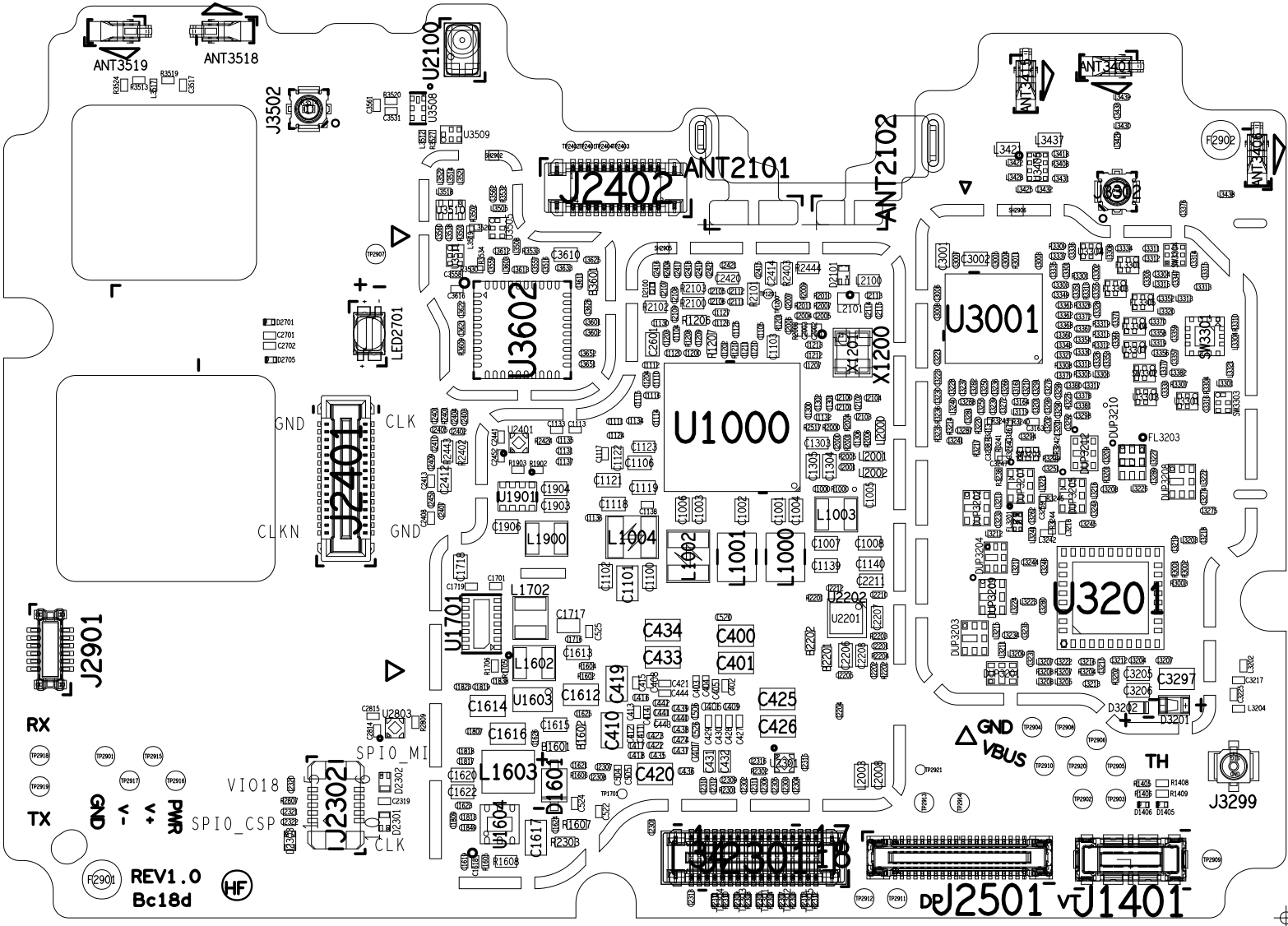
ANT3519
ANT3518
J3502
U2100
U3508
U3509
J2402
ANT2101
ANT2102
ANT3401
ANT3402
F2902
J3001
U3001
SW3301
SW3303
U3602
LED2701
D2701
C2701
C2702
D2705
X1200
U1000
J2401
GND
CLK
CLKN
GND
U2401
U1901
L1900
L1004
L1002
L1001
L1000
L1003
L2001
L2002
U2202
U2201
U3201
DUP3210
FL3203
DUP3204
DUP3203
J2901
U1701
L1702
L1602
U1603
C1614
C1612
C419
C410
C420
C434
C433
C400
C401
C425
C426
C3205
C3206
C3297
D3202
D3201
GND
VBUS
TH
J3299
RX
TX
U2803
SPIO_MI
VIO18
SPIO_CSP
CLK
J2302
GND
V-
V+
PWR
L1603
D1601
U1604
C1617
R1608
F2901
REV1.0
Bc18d
HF
J2301
J2501
DP
J1401
VT

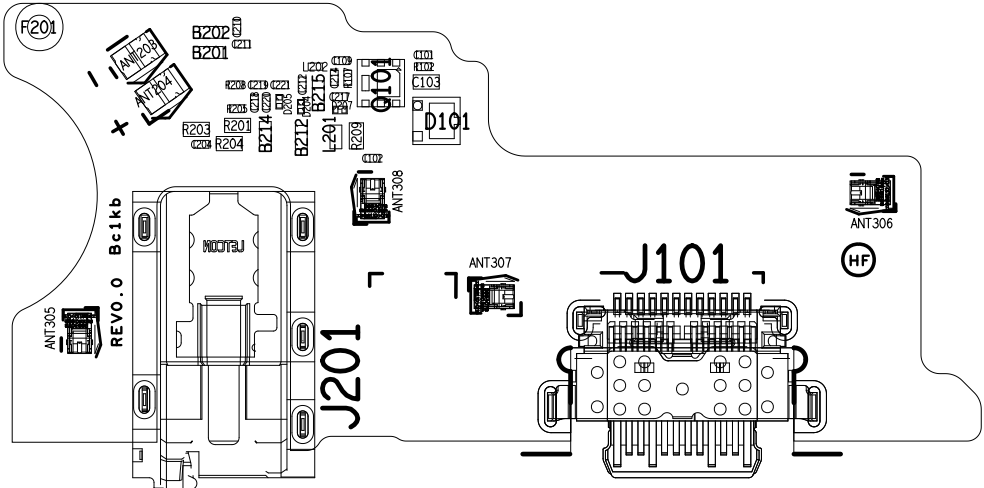
F201
ANT204
ANT204
B202
B201
C21
L202
C109
C101
C102
C103
Q101
R208
C219
C22
R205
C218
C20
D201
D202
C23
B215
R206
C24
R207
L201
R209
B214
B212
R203
R201
C204
R204
D101
C107
ANT308
ANT306
HF
ANT307
J101
ANT305
REV0.0 Bc1kb
MOOTAJ
J201

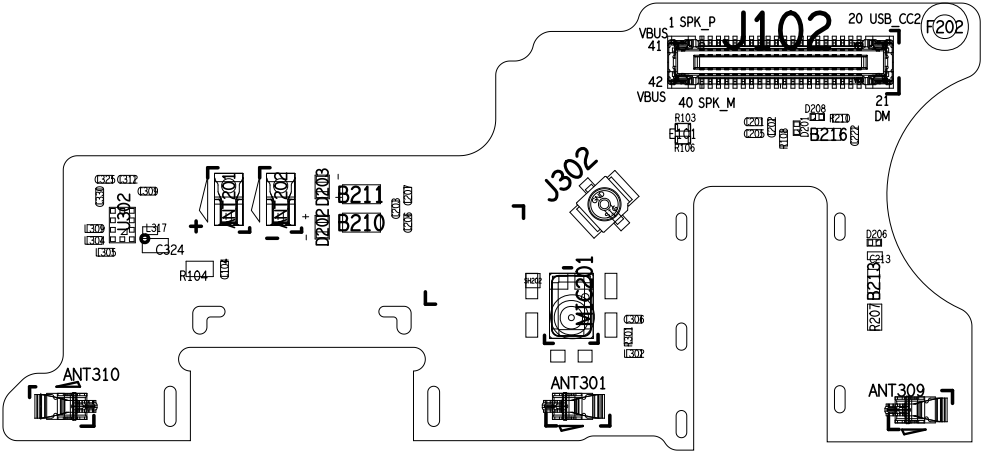
J102
1 SPK_P
20 USB_CC2
VBUS
41
42
VBUS
40 SPK_M
21
DM
F202
R103
E101
R106
C201
C202
C203
R201
R202
D208
R210
B216
C211
J302
C326
C312
C309
C339
J301
C309
C347
C305
C324
R104
C304
AN201
AN202
D20P
D20B
B211
B210
C210
C209
C207
C301
C306
R301
R302
D206
B213
C213
R207
ANT310
ANT301
ANT309